ORNL/TM-2016/328

Biota Modeling in EPA's Preliminary Remediation Goal and Dose Compliance Concentration Calculators for Use in EPA Superfund Risk Assessment: Explanation of Intake Rate Derivation, Transfer Factor Compilation, and Mass Loading Factor Sources

Approved for public release.
Distribution is unlimited.

Karessa L. Manning
Fredrick G. Dolislager
Michael B. Bellamy

November 2016

OAK RIDGE NATIONAL LABORATORY
MANAGED BY UT-BATTELLE FOR THE US DEPARTMENT OF ENERGY

ORNL/TM-2016/328

Environmental Sciences Division
Center for Radiation Protection Knowledge

Biota Modeling in EPA's Preliminary Remediation Goal and Dose Compliance Concentration Calculators for Use in EPA Superfund Risk Assessment: Explanation of Intake Rate Derivation, Transfer Factor Compilation, and Mass Loading Factor Sources

Karessa L. Manning, University of Tennessee, Knoxville, TN
Fredrick G. Dolislager, University of Tennessee, Knoxville, TN
Michael B. Bellamy, Oak Ridge National Laboratory, Oak Ridge, TN

Date Published: November, 2016

Prepared by
OAK RIDGE NATIONAL LABORATORY
Oak Ridge, TN 37831-6283
managed by
UT-BATTELLE, LLC
for the
US DEPARTMENT OF ENERGY
under contract DE-AC05-00OR22725

CONTENTS

LIST OF FIGURES

LIST OF TABLES

LIST OF EQUATIONS

ACRONYMS, INITIALISMS, AND ABBREVIATIONS

BV	Soil to plant transfer factor
BW	Body Weight
CERCLA	Comprehensive Environmental Response, Compensation, and Liability Act
CF	Contaminated Fraction
CP	Cooking/Preparation
CR	Consumption Rate
DCC	Dose Compliance Concentration
DOE	U.S. Department of Energy
EA	Environment Agency of the U.K.
EFH	Exposure Factors Handbook
EPA	U.S. Environmental Protection Agency
HHRAP	Human Health Risk Assessment Protocol for Hazardous Waste Combustion Facilities
IAEA	International Atomic Energy Agency
IAG	Interagency Agreement
IR	Intake Rate
MLF	Mass Loading Factor
NCRP	National Council on Radiation Protection and Measurements
NPL	National Priorities List
ORNL	Oak Ridge National Laboratory
OSWER	Office of Solid Waste and Emergency Response
P&M	Pinder and McLeod
PRG	Preliminary Remediation Goal
Qp	fodder intake by farm animals
Qs	soil intake by farm animals
Qw	water intake by farm animals
RADSSL	Radionuclide Soil Screening Levels
RCRA	Resource Conservation and Recovery Act
SL	Soil Loading

SSG	Soil Screening Guidance
TF	Transfer Factor
TRS	Technical Report Series
TWA	Time Weighted Average

ABSTRACT

The Preliminary Remediation Goal (PRG) and Dose Compliance Concentration (DCC) calculators are screening level tools that set forth Environmental Protection Agency's (EPA) recommended approaches, based upon currently available information with respect to risk assessment, for response actions at Comprehensive Environmental Response, Compensation, and Liability Act (CERCLA) sites, commonly known as Superfund. The screening levels derived by the PRG and DCC calculators are used to identify isotopes contributing the highest risk and dose as well as establish preliminary remediation goals. Each calculator has residential gardening and subsistence farmer exposure scenarios that require modeling of the transfer of contaminants from soil and water into various types of biota (crops and animal products). New publications of human intake rates of biota; farm animal intakes of water, soil, and fodder; and soil to plant interactions require updates be implemented into the PRG and DCC calculators. Recent improvements have been made in the biota modeling for these calculators, including newly derived biota intake rates, more comprehensive soil mass loading factors (MLFs), and more comprehensive soil to tissue transfer factors (TFs) for animals and soil to plant transfer factors (BV's). New biota have been added in both the produce and animal products categories that greatly improve the accuracy and utility of the PRG and DCC calculators and encompass greater geographic diversity on a national and international scale.

ACKNOWLEDGEMENTS

This document was prepared for the U.S. EPA, Office of Superfund Remediation and Technology Innovation (OSRTI) for use in the Preliminary Remediation Goal and Dose Compliance Concentration calculators. This report was developed by the Department of Energy's (DOE) Oak Ridge National Laboratory (ORNL) under an Interagency Agreement (IAG) with the EPA. Special thanks to all of the reviewers, listed below, for their valuable inputs and critiques that improved this paper.

U.S. EPA Office of Land and Emergency Management

Office of Superfund Remediation and Technology Innovation

Stuart Walker

Office of Resource Conservation and Recovery

Timothy Taylor

U.S. EPA Office of Research and Development

National Center for Environmental Assessment

Jacqueline Moya

U.S. EPA Region 4

Tim Frederick

Glenn Adams

Kevin Koporec

U.S. EPA Region 9

Mark Ripperda

Robert Terry

Environment Agency of the United Kingdom

Paul M. Robinson

Peter Orr

Public Health England

Justin Smith

Kelly Jones

Natural Environmental Research Counsil

Centre for Ecology and Hydrology

Brenda J. Howard

Fukushima University

Institute of Environmental Radioactivity

Tom Hinton

1. INTRODUCTION

There is a need for advancement in risk assessment modeling regarding the consumption of produce and animal products that are cultivated on contaminated land and/or land irrigated with contaminated water. The EPA, in conjunction with Oak Ridge National Laboratory (ORNL), have developed a hierarchal selection process of biota modeling in the PRG and DCC calculators to address this need. The PRG and DCC calculators are a product of ORNL via an IAG with OSRTI. These risk assessment web tools are free to the public and set forth EPA's recommended approaches for response actions at CERCLA sites (commonly known as Superfund), and the screening level equations are based upon currently available guidance and information with respect to risk assessment. ORNL provides these web tools to perform risk assessments on DOE sites that are on the CERCLA National Priorities List (NPL) in addition to many other sites for private and governmental organizations. The NPL is EPA's list of the most serious uncontrolled or abandoned hazardous waste sites identified for possible long-term remedial action under Superfund (RAIS, 2016).

The recent improvements in biota modeling parameters for EPA's PRG and DCC calculators are presented in this technical memorandum (TM). Each of these calculators (web tools) provides fact sheets in the welcome section of their respective homepages that describe the purpose of these tools in more detail. To provide the users of these tools the most accurate risk assessment possible, an update to biota modeling parameters was necessary to be in accordance with recent guidance from the International Atomic Energy Agency (IAEA) and the U.S. EPA 2011 Exposure Factors Handbook (EFH). The updates in biota modeling include newly derived biota intake rates and more diverse BVs, TFs, and MLFs. These updates will greatly improve the accuracy and utility of the PRG and DCC calculators and encompass greater geographic diversity on a national and international scale.

Formerly, the BVs used in these risk assessment tools were applied generically to all produce types. Now, the BVs are element-specific, biota-specific, climate zone-specific, and soil type-specific, where applicable. These new BVs and TFs include contributions from the recent IAEA TRS-472 and TRS-479 as well as Science Report: SC030162/SR2 from the Environment Agency (EA) of the U.K. and were used to supersede most of the old generic values from the National Council on Radiation Protection and Measurements (NCRP), Radionuclide Soil Screening Levels (RADSSL), RESidual RADioactive (RESRAD), and *A Review and Analysis of Parameters for Assessing Transport of Environmentally Released Radionuclides through Agriculture* (Baes et. al., 1984). MLFs were also improved from a single MLF, that was applied to all produce, to individual MLFs that correspond with the individual produce items of each new produce. Previously, produce intake rates were based on generic fruit and generic vegetables. The new produce intake rates are based on 24 individual produce items, found in the 2011 EFH, that contribute to the overall produce ingestion PRG and DCC output. New animal products have also been added to the site-specific modes of these calculators. Finally, the intake rates for produce and animal products can be implemented in screening level calculations as raw weight or weight after cooking/preparation loss. Prior to these updates, raw weight was the only option.

2. INTAKE RATE DERIVATION

2.1 METHOD OF DERIVATION

The updated intake rates were derived following the Office of Solid Waste and Emergency Response's (OSWER) method outlined in the 2005 Human Health Risk Assessment Protocol (HHRAP) for Hazardous Waste Combustion Facilities. HHRAP provides guidance for regional and state Resource Conservation and Recovery Act (RCRA) waste programs (HHRAP, 2005). HHRAP uses consumer only intake rates, from chapter 13 of the 2011 EFH and the intake rate derivation method found on pages 6-12 through 6-13 of HHRAP, to determine consumption rates of homegrown produce for Farmer Child, Farmer Adult, Resident Child, Resident Adult, Fisher Child, and Fisher Adult scenarios. RCRAs consumption rates are shown in table C-1-2 of the HHRAP. Consumer only intake rates are the amount of homegrown produce consumed from a singular site. In the case of a contaminated site, it is conservatively assumed that 100% of produce grown on-site is contaminated, yielding a contaminated fraction (CF) of 1. Per capita intake rates are based on the average consumer intakes and, therefore, the contaminated fraction of food consumed is less than 1 because only a portion of the produce consumed may come from a contaminated site. For our purposes, per capita data from EFH chapter 9 (Figure A-1, Appendix A) was used to fill in data gaps in the consumer only intake rate tables from EFH chapter 13 (Figure A-2, Appendix A). An example derivation is shown in Equations A-1 through A-9 in Appendix A, using the method found on page 6-12 of HHRAP. For sake of clarity, HHRAP uses the term consumption rate; this document uses the term intake rate instead of consumption rate for consistency with the PRG and DCC calculators. Both consumption rate and intake rate refer to the amount of food consumed.

2.2 DIFFERENCES IN INTAKE RATE DERIVATION (PRG & DCC VS. HHRAP)

HHRAP provides three produce categories: Exposed Aboveground Produce, Protected Aboveground Produce, and Belowground Produce. These are combined from the 5 produce categories provided in EFH 1997, which include exposed fruit, protected fruit, exposed vegetables, protected vegetables, and root vegetables. The HHRAP method was used to simplify the default biota intake equations in the PRG and DCC calculators by using a CF of 1 (100%), assuming all 'consumer only' produce is harvested from contaminated land on-site. In site-specific mode of the PRG and DCC tools, users are given the option to change the CF along with child and adult intake rates. There were some key alterations made to the HHRAP process of deriving intake rates for use in the PRG and DCC calculators, including:

1. Both Fisher Child and Fisher Adult were excluded from the intake rate derivation, since subsistence fisher produce ingestion is the same as resident produce ingestion in the PRG and DCC calculators.
2. The default intake rates are based on raw biota, which does not include cooking and preparation loss. In site-specific mode, the user can select fresh weight or cooked weight. This will change the intake rates populated in the tool between raw intake rates and intake rates that include preparation and cooking loss. All of these proposed intake rates can be found in Table A-1 in Appendix A. Table A-2 in Appendix A lists biota that will only be available in site-specific mode of the PRG and DCC calculators.

3. The intake rates derived for the PRG and DCC calculators are given in g/day instead of kg/kg-day. A body weight conversion factor of 15kg for children and 80 kg for adults were used, as per the OSWER directive 9200.1-120. See Appendix D for more information on why these body weights were chosen.
4. In the HHRAP, the age segment used to calculate intake rates for adults was 6-70 years and for children was 1-6 years. To calculate new intake rates, a more protective age segment of 21-70 years for adults was used, as per OSWER directive 9200.1-120. For children, the age segment 0-6 was used for consistency with other land use exposure equations from the PRG, DCC, and Regional Screening Level (RSL) calculators, as well as OSWER directive 9200.1-120. See Appendix D for more information on why these age segments were chosen.
5. Per capita intake rates from chapter 9, 10, and 11 of EFH 2011 and EFH 1997 and consumer only intake rates from chapter 13 of EFH 2011 and EFH 1997 as well as page 6-12 of the HHRAP were used to derive individual biota intake rates, such as apples and potatoes. Although HHRAP follows that same derivation method, the biota categories they use are more general (i.e., exposed, protected, and root).

3. TRANSFER FACTOR SOURCE COMPILATION

3.1 USE OF TRANSFER FACTORS IN THE PRG AND DCC CALCULATORS

TFs are used in the PRG and DCC calculators. The TFs used for animals are called transfer coefficients. The transfer coefficient has been widely adopted for quantifying radionuclide transfer to both milk (Fm, d L^{-1} or d kg^{-1}) and meat (Ff, d kg^{-1}) as the equilibrium ratio of the radionuclide activity concentration in milk/meat to the daily dietary radionuclide intake (IAEA, TRS-472, 2010). For animal product modeling, it is also necessary to address grazing habits by finding Qw (quantity of water), Qs (quantity of soil), and Qp (quantity of fodder) intake rates by farm animals. The intake rates by farm animals used in the PRG and DCC tools can be found in Table F-1 in Appendix F. Soil to plant TFs, called BVs, are used to determine the quantity of a radionuclide that is transferred to a plant. These TFs and BVs are used in the PRG and DCC to model radionuclide transfer to animal products and produce, respectively, before human consumption.

3.2 TRANSFER FACTOR HIERARCHY

Table B-1 in Appendix B of this document outlines the TF and BV sources and hierarchy for each individual produce and farm animal product that is available in the PRG and DCC calculators. The source hierarchy is as follows:

1. IAEA
2. EA
3. NCRP-123
4. RADSSL
5. RESRAD
6. Baes paper

Previously, the DCC and PRG calculators only modeled generic overall produce consumption, because BVs were only quantified based on specific elements. IAEA breaks down transfer to the plant parts (i.e., fruit, seeds, etc.) It is for this reason that the PRG and DCC calculators can now model transfer to specific produce. When a potato is selected for produce output, for instance, the BV category that is used from IAEA is specifically for the edible tuber portion of the plant. IAEA TRS-472 has also divided BVs into climate zones and soil types, which has been implemented into the PRG and DCC calculators as well. The available climate zones include temperate, tropical, and subtropical. The available soil types include all (default), sand, loam, clay, organic, coral sand, and other. So, the BV used for a tuber plant in a temperate climate zone with sandy soil may differ from a BV used for a tuber plant in temperate climate zone with loamy soil or tropical climate zone with sandy soil, etc.

If there is not a BV available from IAEA that fits into the particular climate zone and soil type parameters that a user has chosen, then the hierarchy will move to EA. EA does not break down their BVs in as much detail as IAEA; however, they do offer more detail than the rest of the hierarchy. EA divides BVs into 3 different plant types, including fruit, green vegetables, and root vegetables. Therefore, if produce output is selected for a potato grown in a tropical climate with loamy soil and there is no BV available from IAEA, then the BV selected from EA would overlook the climate zone and soil type selected and look in EA for a BV for a root vegetable for whichever radionuclide was chosen.

If a BV is not available in either IAEA or EA for the chosen inputs, then the hierarchy continues to NCRP-123, RADSSL, and RESRAD, respectively. These sources only provide BVs based on the radionuclide selected. They do not take produce type, climate type, or soil type into account.

Finally, the soil to plant transfer factors that come from the Baes paper are divided into two categories, B_v and B_r. According to Baes, B_v values are used for vegetative growth (leaves and stems) and B_r values are used for non-vegetative growth (fruits, seeds, and tubers). Figure E-1 from Appendix E lists how the B_v and B_r values should be applied, and Table E-1 from Appendix E outlines how BVs from Baes are applied in the PRG and DCC tools.

TFs are applied using the same hierarchy as BVs; however, climate zone and soil type are not taken into consideration for TFs. New TFs have been introduced for animal products in IAEA that have not previously been incorporated in the PRG and DCC calculators. These include sheep meat, sheep milk, goat meat, and goat milk.

4. MASS LOADING FACTOR SOURCE COMPILATION

4.1 MASS LOADING FACTOR HIERARCHY

Another aspect that has been added to the PRG and DCC calculators is plant-specific soil mass loading factors. Previously, an MLF of 0.26 was provided for generic fruits and vegetables and an MLF of 0.25 was provided for pasture. Listed in Table C-1 of Appendix C are the proposed MLFs to be implemented for each individual produce in the PRG and DCC tools. The MLF hierarchy is as follows:

1. Hinton
2. EA
3. Pinder and McLeod

The MLFs that Hinton provide are in units of mg soil/g dry plant. In order to get these MLFs in the units required for the PRG and DCC tools, they were converted to g soil/g dry plant. Then, a moisture content conversion factor from Table G-1 of the soil screening guidance (SSG) was used to convert the MLF to g soil/g fresh plant. To provide the best accuracy possible, there were a few surrogate Hinton values used for other produce, provided they were in a similar family. Bush beans were a surrogate for lima beans and snap beans. If a produce-specific moisture content conversion factor was not available in Table G-1, either a known conversion factor was used from another source or the average for a corresponding group of vegetables or fruits was used.

The document "Updated Background to the CLEA Model", SC050021/SR3, is the second MLF source. Similar to Hinton, the MLFs were provided in g dry soil/g dry plant. These are labeled as SL in Table 6.3 of EA Document SC050021/SR3. To convert these MLFs to g dry soil / g fresh plant, conversion factors were used from Table 7.1 of EA Document SC050021/SR3. If the individual produce was not listed, the average moisture content conversion factor was used from the respective produce category.

Pinder and McLeod was only used for corn, as an MLF for corn was not found in any of the previous sources.

The pasture MLF of 0.25 was derived based on Hinton. In the Hinton document, the pasture MLF ranges from <1 mg soil/g dry plant to 500 mg soil/g dry plant. Given the large range, the median was taken and converted into units of g soil/g dry plant, or 250/1000 = 0.25. This MLF is applied to pasture, rice, and cereal grain.

5. CONCLUSION

There is a need for advancement in risk assessment modeling regarding the consumption of produce and animal products that are cultivated on contaminated land and/or land irrigated with contaminated water. The diversity of biota now included in the PRG and DCC calculators addresses this need. Previously, these tools only offered intake data for a generic fruit and a generic vegetable in the overall produce equations. Users are now able to select from 24 specific produce types to include in the total produce consumption output. In site-specific mode, users can now add sheep meat, sheep milk, goat meat, and goat milk to their output in addition to the 6 animal products that the PRG and DCC tools already provide. The user-provided option now allows users to choose between chicken, duck, turkey, and goose for poultry output. The intake rates for produce and animal products can now be implemented in screening level calculations as raw weight or weight after cooking/preparation loss. Prior to these updates, raw weight was the only option.

The diversity of BVs and TFs have also improved. Previously, BVs that applied to produce were generic for all produce types. Now, the BVs encompass 24 individual produce types, 4 climate zones, and 7 soil types. New TFs have also been introduced for animal products that have not previously been incorporated. These include sheep meat, sheep milk, goat meat, and goat milk.

Use of MLFs have been enhanced from a single MLF applied to all produce to 24 individual MLFs that correspond with the 24 individual produce items that have new produce intake rates. For human consumption of produce, the dry weight MLFs provided in the literature were converted to a wet weight using moisture content values specific to plant type. This refinement allows the MLFs and BVs to be in consistent units.

These improvements will greatly expand the use and applicability of the PRG and DCC calculators in the field of risk assessment with respect to CERCLA sites as well as many other sites for private and governmental organizations. The newly derived biota intake rates, MLFs, and TFs encompass greater geographic diversity.

6. REFERENCES

ANL. 2001. *User's Manual for RESRAD Version 6.0*. ANL/EAD-4. Argonne National Laboratory, Argonne, IL.

Baes III, C.F.; Sharp, R.D.; Sjoreen, A.L.; and Shor, R.W. 1984. *A Review and Analysis of Parameters for Assessing Transport of Environmentally Released Radionuclides through Agriculture*. Oak Ridge National Laboratory. ORNL-5786

E.A. 2006. *Initial Radiological Assessment Methodology – Part 2 Methods and Input Data*. Environment Agency, Bristol, U.K.

E.A. 2009. *Updated Technical Background to the CLEA Model*. Environment Agency, Bristol, U.K. SC050021/SR3.

Hinton, T. G. 1992. "*Contamination of plants by resuspension: a review, with critique of measurement methods*." Sci. Total Environ. 121:171-193.

Hoffman, D.; Rattner, B.A. jr.; Burton, G.A. jr. 2003. *Handbook of Ecotoxicology: Second Edition*. Lewis Publishers. Pg. 154.

IAEA. 2010. *Handbook of Parameter Values for the Prediction of Radionuclide Transfer in Terrestrial and Freshwater Environments*. International Atomic Energy Agency, Vienna. Technical Report Series 472.

IAEA. 2014. *Handbook of Parameter Values for the Prediction of Radionuclide Transfer to Wildlife*. International Atomic Energy Agency, Vienna. Technical Report Series 479.

Lyons, R.K.; Machen, R.; Forbes T.D.A. 1999. Understanding Forage Intake in Range Animals. AgriLIFE Extension. Texas A&M.

National Council on Radiation Protection and Measurements (NCRP). 1996. *Report No. 123 – Screening Models for Releases of Radionuclides to Atmosphere, Surface Water, and Ground – Vol. I and II*.

National Research Council. 1994. Nutrient Requirements of Poultry: Ninth Revised Edition. National Academy Press. Washington, D.C.

Pinder, J.E.; McLeod, K.W. 1989. "*Mass Loading of Soil Particles on Plant Surfaces.*" Health Physics Journal. 57:6:935-942.

Risk Assessment Information System. Accessed September 21, 2016. https://rais.ornl.gov/ .

Tarr, B. Guidelines to Feeding and Management of Dairy Goats. NUTRIFAX. Shur Gain.

U.S.D.A, 2000. Swine Nutrition Guide. Cooperative Extension Service for South Dakota State University and University of Nebraska. EC 95-273-C ESS 38.

U.S. EPA. 1996. *Soil Screening Guidance: Appendix G* EPA540/R-96/018. Office of Solid Waste and Emergency Response, Washington, D.C.

U.S. EPA. 1997. *Exposure Factors Handbook*. EPA/600/P-95/002Fa. Office of Research and Development, Washington, D.C.

U.S. EPA. 1998. *Human Health Risk Assessment Protocol for Hazardous Waste Combustion Facilities Draft*. Office of Solid Waste, Washington, D.C.

U.S. EPA. 1999. Data Collection for the Hazardous Waste Identification Rule. Office of Solid Waste. Washington, D.C.

U.S. EPA. 2000. EPA Radionuclide Soil Screening Level (SSL). Directive 9355.4-16A. Soil Screening Guidance for Radionuclides: User's Guide. Office of Solid Waste and Emergency Response (OSWER), Washington, D.C.

U.S. EPA. 2005. *Human Health Risk Assessment Protocol for Hazardous Waste Combustion Facilities Final*. Office of Solid Waste, Washington, D.C.

U.S. EPA. 2011. *Exposure Factors Handbook 2011 Edition (Final)*. National Center for Environmental Assessment, Office of Research and Development. Washington, D.C. EPA/600/R-090/052F.

U.S. EPA. 2014 *Human Health Evaluation Manual, Supplemental Guidance: Update of Standard Default Exposure Factors*. Office of Solid Waste and Emergency Response (OSWER), Washington, D.C. Directive 9200.1-120.

U.S. EPA. 2016. Dose Compliance Concentration for Radionuclides. Accessed November 2016. https://epa-dccs.ornl.gov/

U.S. EPA. 2016. Preliminary Remediation Goals for Radionuclides. Accessed November 2016. https://epa-prgs.ornl.gov/radionuclides/

Ward, D. 2015. Water Requirements of Livestock. Ontario Ministry of Agriculture, Food and Rural Affairs (OMAFRA). Factsheet Order # 07-023.

APPENDIX A. INTAKE RATE DERIVATION & PROPOSED INTAKE RATES IN THE PRG & DCC CALCULATOR

INTAKE RATE DERIVATION EXAMPLE

The example set of equations in Appendix A shows the step by step process used to estimate the intake rate of apples for farmer child in g/day and farmer adult in g/day for fresh weight and prepared/cooked weight. Although these examples are for apples, this process was used to determine all of the intake rates presented in Table A-1 below. The values used in the example equations can be found in the 2011 EFH, tables 9-5 and 13-31; both of which are shown below as Figure A-1 and Figure A-2, respectively. Both CP-loss and CP post-loss are taken from Figure A-3 below.

First, as seen in Figure A-2, there are missing consumer-only mean intake rates for age groups <1, 1-2, 3-5, and 12-19. To fill in these data gaps for consumer only intake rates, per capita intake rates from Figure A-1 were used. An example of this process can be found in Equation A-1 below. Second, the age groups used in table 9-5 are different than those used in table 13-31. The only instance where this became an issue is when consumer-only data is missing for the 40-69 age segment. In this case a per capita value was estimated by averaging the intake rates given for the age segments 20-49 and 50+. Dairy is only instance where estimation was necessary.

Figure A-1 below is Table 9-5 from Chapter 9 of the 2011 Exposure Factors Handbook.

Table 9-5. Per Capita Intake of Individual Fruits and Vegetables Based on the 2003–2006 NHANES (g/kg-day, edible portion, uncooked weight)

Population Group	*N*	Percent Consuming	Mean	SE	Percent Consuming	Mean	SE	Percent Consuming	Mean	SE	Percent Consuming	Mean	SE
		Apples			Asparagus			Bananas			Beans		
Whole Population	16,783	33	0.41	0.01	2	0.01	0.00	55	0.37	0.01	45	0.24	0.01
Age Group													
Birth to 1 year	865	39	2.23	0.24	1	0.00	0.00	46	1.83	0.19	30	0.54	0.06
1 to 2 years	1,052	50	1.96	0.14	2	0.03	0.01	77	2.35	0.26	49	0.69	0.06
3 to 5 years	978	42	1.21	0.10	1	0.01	0.01	73	1.00	0.09	43	0.61	0.07
6 to 12 years	2,256	39	0.74	0.06	1	0.01	0.00	68	0.42	0.04	37	0.30	0.03
13 to 19 years	3,450	27	0.27	0.02	1	0.00	0.00	50	0.15	0.01	31	0.13	0.01
20 to 49 years	4,289	28	0.21	0.02	2	0.01	0.00	48	0.20	0.01	46	0.19	0.01
Female 13 to 49 years	4,103	29	0.23	0.02	2	0.01	0.00	50	0.20	0.01	45	0.17	0.01
50 years and older	3,893	38	0.28	0.02	3	0.02	0.00	58	0.33	0.02	51	0.22	0.01
Race													
Mexican American	4,450	33	0.58	0.03	1	0.00	0.00	56	0.56	0.04	59	0.32	0.01
Non-Hispanic Black	4,265	27	0.31	0.02	0	0.00	0.00	55	0.25	0.02	43	0.25	0.01
Non-Hispanic White	6,757	35	0.40	0.02	3	0.02	0.00	54	0.36	0.02	43	0.22	0.01
Other Hispanic	562	32	0.47	0.06	1	0.00	0.00	55	0.53	0.06	58	0.25	0.03
Other Race—Including Multiple	749	32	0.47	0.04	3	0.01	0.00	58	0.43	0.04	50	0.30	0.04

FIGURE A-1. EFH CHAPTER 9 PER CAPITA INTAKE RATES

Figure A-2 is Table 13-31 from Chapter 13 of the 2011 Exposure Factors Handbook.

Table 13-31. Consumer-Only Intake of Home-Produced Apples (g/kg-day)

Population Group	Nc wgtd	Nc unwgtd	% Consuming	Mean	SE	*p*1	*p*5	*p*10	*p*25	*p*50	*p*75	*p*90	*p*95	*p*99	MAX
Total	5,306,000	272	2.82	1.19	0.08	0.08	0.23	0.28	0.45	0.82	1.47	2.38	3.40	5.42	10.10
Age															
1 to 2	199,000	12	3.49	*	*	*	*	*	*	*	*	*	*	*	*
3 to 5	291,000	16	3.59	*	*	*	*	*	*	*	*	*	*	*	*
6 to 11	402,000	25	2.41	1.28	0.19	0.47	0.47	0.56	0.74	0.96	1.29	2.98	4.00	4.00	4.00
12 to 19	296,000	12	1.44	*	*	*	*	*	*	*	*	*	*	*	*
20 to 39	1,268,000	61	2.06	0.80	0.11	0.19	0.23	0.26	0.30	0.60	0.92	1.55	1.97	5.42	5.42
40 to 69	1,719,000	90	3.03	0.96	0.14	0.06	0.09	0.26	0.40	0.65	1.08	1.59	2.38	9.83	9.83
≥ 70	1,061,000	52	6.68	1.45	0.14	0.20	0.26	0.45	0.63	1.18	1.82	3.40	3.62	4.20	4.20
Season															
Fall	1,707,000	60	3.58	1.28	0.12	0.26	0.30	0.32	0.58	1.03	1.66	2.69	3.40	4.25	4.25
Spring	639,000	74	1.38	0.95	0.11	0.19	0.24	0.28	0.38	0.57	1.10	2.00	2.78	5.87	5.87
Summer	1,935,000	68	4.25	1.12	0.17	0.06	0.09	0.19	0.40	0.69	1.41	2.29	2.98	9.83	9.83
Winter	1,025,000	70	2.10	1.30	0.18	0.19	0.23	0.32	0.57	0.88	1.59	2.75	3.40	10.10	10.10
Urbanization															
Central City	912,000	30	1.62	1.24	0.26	0.23	0.26	0.39	0.51	0.92	1.59	2.19	2.26	10.10	10.10
Non-metropolitan	2,118,000	122	4.70	1.27	0.13	0.06	0.12	0.25	0.41	0.90	1.55	2.92	3.48	9.83	9.83
Suburban	2,276,000	120	2.63	1.09	0.09	0.19	0.24	0.29	0.44	0.77	1.29	2.29	3.40	5.42	5.42
Race															
Black	84,000	4	0.39	*	*	*	*	*	*	*	*	*	*	*	*
White	5,222,000	268	3.31	1.18	0.08	0.08	0.23	0.28	0.45	0.80	1.41	2.38	3.40	5.42	10.10
Region															
Midwest	2,044,000	123	4.41	1.38	0.15	0.22	0.29	0.30	0.52	0.92	1.61	2.69	3.40	9.83	10.10
Northeast	442,000	18	1.07	*	*	*	*	*	*	*	*	*	*	*	*
South	1,310,000	65	2.04	1.10	0.11	0.20	0.24	0.30	0.44	0.92	1.38	1.90	2.98	4.00	4.91
West	1,510,000	66	4.19	1.20	0.13	0.06	0.19	0.26	0.47	0.79	1.82	2.75	3.62	4.25	4.25
Response to Questionnaire															
Households who garden	4,707,000	246	6.91	1.21	0.08	0.13	0.25	0.30	0.47	0.82	1.47	2.38	3.40	5.87	10.10
Households who farm	1,299,000	68	17.72	1.39	0.13	0.06	0.36	0.54	0.70	0.96	1.58	2.99	4.00	4.91	5.87

* Intake data not provided for subpopulations for which there were less than 20 observations.

SE = Standard error.
p = Percentile of the distribution.
Nc wgtd = Weighted number of consumers.
Nc unwgtd = Unweighted number of consumers in survey.

Source: Based on EPA's analyses of the 1987–1988 NFCS.

FIGURE A-2. EFH CHAPTER 13 CONSUMER ONLY INTAKE RATES

Figure A-3 is Table 13-69 from Chapter 13 of the 2011 Exposure Factors Handbook.

Table 13-69. Percent Weight Losses From Food Preparation

Food Group	Mean Net Preparation/Cooking Loss (%)	Mean Net Post Cooking (%)
Meats[a]	29.7[b]	29.7[c]
Fish and shellfish[d]	31.5[b]	10.5[c]
Fruits	25.4[e]	30.5[f]
Vegetables[g]	12.4[h]	22[i]

[a] Averaged over various cuts and preparation methods for various meats including beef, pork, chicken, turkey, lamb, and veal.

[b] Includes dripping and volatile losses during cooking.

[c] Includes losses from cutting, shrinkage, excess fat, bones, scraps, and juices.

[d] Averaged over a variety of fish and shellfish to include bass, bluefish, butterfish, cod, flounder, haddock, halibut, lake trout, mackerel, perch, porgy, red snapper, rockfish, salmon, sea trout, shad, smelt, sole, spot, squid, swordfish steak, trout, whitefish, clams, crab, crayfish, lobster, oysters, and shrimp and shrimp dishes.

[e] Based on preparation losses. Averaged over apples, pears, peaches, strawberries, and oranges. Includes losses from removal of skin or peel, core or pit, stems or caps, seeds, and defects. Also includes losses from removal of drained liquids from canned or frozen forms.

[f] Averaged over apples and peaches. Include losses from draining cooked forms.

[g] Averaged over various vegetables to include asparagus, beets, broccoli, cabbage, carrots, corn, cucumbers, lettuce, lima beans, okra, onions, green peas, peppers, pumpkins, snap beans, tomatoes, and potatoes.

[h] Includes losses due to paring, trimming, flowering the stalk, thawing, draining, scraping, shelling, slicing, husking, chopping, and dicing and gains from the addition of water, fat, or other ingredients. Averaged over various preparation methods.

[i] Includes losses from draining or removal of skin. Based on potatoes only.

Source: Derived from USDA (1975)

FIGURE A-3. FOOD PREPARATION LOSS

EQUATION A-1. DERIVATION OF CONSUMER ONLY INTAKE RATE

$$IR_{con<1}\left(\frac{6.47\ g}{kg\text{-}day}\right) = TP_{con}\left(\frac{1.19\ g}{kg\text{-}day}\right) \times \left(\frac{IR_{per<1}\left(\frac{2.23\ g}{kg\text{-}day}\right)}{TP_{per}\left(\frac{0.410\ g}{kg\text{-}day}\right)}\right)$$

TP_{con} = Mean consumer-only intake for total population (EFH 2011 Table 13-31).

TP_{per} = Mean per capita intake for total population (EFH 2011 Table 9-5).

IR_{con} = Mean consumer-only intake of population for a particular age segment (i.e. <1) (derived in this equation).

IR_{per} = Mean per capita intake of population for a particular age segment (i.e. <1) (EFH 2011 Table 9-5).

EQUATION A-2. FARMER CHILD: APPLE CONSUMER ONLY INTAKE RATE DERIVATION

Consumer Only Intake Rate of Apples for Farmer Child in Fresh Weight:

$$IR_{apple\text{-}child}\left(\frac{5.53\ g}{kg\text{-}day}\right) = \text{Intake Rate of Households Who Farm}\left(\frac{1.39\ g}{kg\text{-}day}\right) \times \left(\frac{TWA_{apple\text{-}child}\left(\frac{4.73\ g}{kg\text{-}day}\right)}{\text{Mean Consumer Only Intake}\left(\frac{1.19\ g}{kg\text{-}day}\right)}\right)$$

where:

$$TWA_{apple\text{-}child}\left(\frac{4.73\ g}{kg\text{-}day}\right) = \frac{\left(\begin{array}{l}\left(IR_{apple(<1)}(6.47\ g/kg\text{-}day) \times ED_{(<1)}(1\ years)\right)+\\ \left(IR_{apple(1<3)}(5.69\ g/kg\text{-}day) \times ED_{(1<3)}(2\ years)\right)+\\ \left(IR_{apple(3<6)}(3.51\ g/kg\text{-}day) \times ED_{(3<6)}(3\ years)\right)+\end{array}\right)}{ED_{child}(6\ years)}$$

EQUATION A-3. FARMER ADULT: APPLE CONSUMER ONLY INTAKE RATE DERIVATION

Consumer Only Intake Rate of Apples for Farmer Adult in Fresh Weight:

$$IR_{\text{apple-adult}}\left(\frac{1.06\text{ g}}{\text{kg-day}}\right) = \text{Intake Rate of Households Who Farm}\left(\frac{1.39\text{ g}}{\text{kg-day}}\right) \times \left(\frac{TWA_{\text{apple-adult}}\left(\frac{0.907\text{ g}}{\text{kg-day}}\right)}{\text{Mean Consumer Only Intake}\left(\frac{1.19\text{ g}}{\text{kg-day}}\right)}\right)$$

where:

$$TWA_{\text{apple-adult}}\left(\frac{0.907\text{ g}}{\text{kg-day}}\right) = \frac{\left(\begin{array}{l}\left(IR_{\text{apple}(20<40)}\left(\frac{0.795\text{ g}}{\text{kg-day}}\right) \times ED_{(20<40)}(19\text{ years})\right) + \\ \left(IR_{\text{apple}(40<70)}\left(\frac{0.961\text{ g}}{\text{kg-day}}\right) \times ED_{(40<70)}(29\text{ years})\right) + \\ \left(IR_{\text{apple}(70+)}\left(\frac{1.45\text{ g}}{\text{kg-day}}\right) \times ED_{(70+)}(1\text{ years})\right)\end{array}\right)}{ED_{\text{adult}}(49\text{ years})}$$

EQUATION A-4. FARMER CHILD: APPLE CONSUMER ONLY INTAKE RATE INCLUDING BODY WEIGHT

Final Consumer Only Intake Rate of Apples for Farmer Child in Fresh Weight:

$$IR_{\text{apple-child}}\left(\frac{82.9\text{ g}}{\text{day}}\right)(FW) = \left[IR_{\text{apple-child}}\left(\frac{5.53\text{ g}}{\text{kg-day}}\right)(FW)\right] \times 15\text{ kg}$$

EQUATION A-5. FARMER ADULT: APPLE CONSUMER ONLY INTAKE RATE INCLUDING BODY WEIGHT

Final Consumer Only Intake Rate of Apples for Farmer Adult in Fresh Weight:

$$IR_{\text{apple-adult}}\left(\frac{84.7\text{ g}}{\text{day}}\right)(FW) = \left[IR_{\text{apple-adult}}\left(\frac{1.06\text{ g}}{\text{kg-day}}\right)(FW)\right] \times 80\text{ kg}$$

EQUATION A-6. FARMER CHILD: APPLE CONSUMER ONLY INTAKE RATE INCLUDING PREPARATION AND COOKING LOSS

Consumer Only Intake Rate of Apples for Farmer Child Including Preparation and Cooking Loss:

$$IR_{apple\text{-}child}\left(\frac{2.87\ g}{kg\text{-}day}\right)(CPW) = IR_{apple\text{-}child}\left(\frac{5.53\ g}{kg\text{-}day}\right)(FW) \times \left(1 - CP_{loss}\left(0.254\right)\right) \times \left(1 - CP_{post\text{-}loss}\left(0.305\right)\right)$$

where:

CPW = Cooking/Preparation Loss Weight

CP_{loss} = Cooking/Preparation Loss Ratio

$CP_{post\text{-}loss}$ = Post Cooking/Preparation Loss Ratio

*Note: Both CP_{loss} and $CP_{post\text{-}loss}$ values were taken from EFH 2011 table 13-69.

EQUATION A-7. FARMER ADULT: APPLE CONSUMER ONLY INTAKE RATE INCLUDING PREPARATION AND COOKING LOSS

Consumer Only Intake Rate of Apples for Farmer Adult Including Preparation and Cooking Loss:

$$IR_{apple\text{-}adult}\left(\frac{0.549\ g}{kg\text{-}day}\right)(CPW) = IR_{apple\text{-}adult}\left(\frac{1.06}{kg\text{-}day}\right)(FW) \times \left(1 - CP_{loss}\left(0.254\right)\right) \times \left(1 - CP_{post\text{-}loss}\left(0.305\right)\right)$$

where:

CPW = Cooking/Preparation Loss Weight

CP_{loss} = Cooking/Preparation Loss

$CP_{post\text{-}loss}$ = Post Cooking/Preparation Loss

*Note: Both CP_{loss} and $CP_{post\text{-}loss}$ values were taken from EFH 2011 table 13-69.

EQUATION A-8. FARMER CHILD: APPLE CONSUMER ONLY INTAKE RATE INCLUDING PREPARATION AND COOKING LOSS AND BODY WEIGHT

Final Consumer Only Intake Rate of Apples for Farmer Child Including Preparation and Cooking Loss:

$$IR_{apple\text{-}child}\left(\frac{43.0\ g}{day}\right)(CPW) = \left[IR_{apple\text{-}child}\left(\frac{2.87\ g}{kg\text{-}day}\right)(CPW)\right] \times 15\ kg$$

EQUATION A-9. FARMER CHILD: APPLE CONSUMER ONLY INTAKE RATE INCLUDING AND COOKING LOSS AND BODY WEIGHT

Final Consumer Only Intake Rate of Apples for Farmer Adult Including Preparation and Cooking Loss:

$$IR_{apple\text{-}adult}\left(\frac{43.9\ g}{day}\right)(CPW) = \left[IR_{apple\text{-}adult}\left(\frac{0.549\ g}{kg\text{-}day}\right)(CPW)\right] \times 80\ kg$$

PROPOSED INTAKE RATES

There were a few concerns raised in the process of calculating intake rates. The first concern was which age segment should be used to determine adult intake rates. Standard guidance and documentation has used the following exposure duration age segments: 6-26 (currently used in the PRG and DCC calculators) or 6-30 (previously used in the PRG and DCC calculators), 6-70, and 21-70. The second concern was whether a single body weight or age-specific body weight should be used to determine both child and adult intake rates. To address these concerns, a sensitivity test was performed; these results can be found in Appendix D. For the child intake rates, the age segment remains 0-6 for most previous documentation. Therefore, intake rates for this study will continue to be calculated based on the 0-6 age segment. Then, a general and age-specific body weight were applied to determine which body weight was more protective for children.

It was determined that, a majority of the time, when the age segment 21-70 was used to calculate intake rates it was more protective for adults. It was also determined that using a single body weight for adults and a single body weight for children was more protective. Table A-1 lists the final intake rates that were calculated. There are both fresh weight (FW) intake rates and cooking/preparation loss (CPW) intake rates. As mentioned in section 2 of this document, these intake rates were determined using consumer only intake rates of homegrown produce provided in the EFH.

TABLE A-1. DEFAULT PROPOSED INTAKE RATE

	IR Farmer Child (FW)	IR Farmer Adult (FW)	IR Resident Child (FW)	IR Resident Adult (FW)	IR Farmer Child (CPW)	IR Farmer Adult (CPW)	IR Resident Child (CPW)	IR Resident Adult (CPW)
Apples[3]	82.9	84.7	72.2	73.7	43.0	43.9	37.4	38.2
Citrus Fruits[3]	194.4	309.4	194.1	309.4	100.6	160.4	100.6	160.4
Berries[3]	23.9	35.4	23.9	35.4	12.4	18.3	12.4	18.3
Peaches	99.3	103.1	111.4	115.7	51.5	53.5	57.7	60.0
Pears	76.9	59.9	66.7	51.9	39.9	31.1	34.6	26.9
Strawberry	25.3	40.5	25.3	40.5	13.1	21.0	13.1	21.0
Total Fruit	502.3	633.1	493.5	626.7	260.5	328.2	255.8	324.9
Asparagus	12.0	39.3	12.0	39.3	8.2	26.8	8.2	26.8
Beets	3.9	33.9	3.9	33.9	2.7	23.2	2.7	23.2
Broccoli	14.4	35.3	13.1	32.0	9.9	24.1	8.9	21.9
Cabbage[3]	11.5	85.7	12.3	92.1	7.8	58.6	8.4	62.9
Carrots	13.3	24.4	14.9	27.3	9.1	16.6	10.2	18.7
Corn	32.7	82.0	23.8	59.8	22.3	56.0	16.3	40.9
Cucumbers	16.9	54.9	25.4	82.4	11.5	37.5	17.3	56.3
Lettuce[3]	4.2	37.5	4.2	37.5	2.9	25.6	2.9	25.6
Lima Beans[2]	6.5	33.8	6.5	33.8	4.5	23.1	4.5	23.1
Okra[2]	5.3	30.2	5.3	30.2	3.6	20.7	3.6	20.7
Onions	7.2	27.2	5.8	21.8	4.9	18.6	4.0	14.9
Peas	28.7	31.7	32.1	35.4	19.6	21.7	21.9	24.2
Pumpkins[2]	45.2	64.8	45.2	64.8	30.9	44.2	30.9	44.2
Snap Beans[2]	27.5	54.2	27.3	53.9	18.8	37.0	18.7	36.8
Tomatoes	34.9	94.2	29.7	80.3	23.8	64.4	20.3	54.8
White Potatoes[3]	57.3	141.8	51.7	127.8	39.1	96.9	35.3	87.3
Total Vegetables	321.7	870.9	313.4	852.3	249.6	595.1	214.1	582.4
Dairy	994.7	676.4	n/a	n/a	n/a	n/a	n/a	n/a
Beef	62.8	165.3	n/a	n/a	31.1	81.7	n/a	n/a
Swine	33.7	92.5	n/a	n/a	16.6	45.7	n/a	n/a
Poultry	46.9	107.4	n/a	n/a	23.2	53.1	n/a	n/a
Egg	31.7	59.6	n/a	n/a	n/a	n/a	n/a	n/a
Fish	57.4	831.8	n/a	n/a	35.2	509.9	n/a	n/a
Total Meat and Dairy	1227.2	1933.0			106.0	690.4		

1. All intake rates are given in g/day.
2. Data taken from EFH 1997 because it was not available in EFH 2011.
3. **Apples:** with/without peel & crabapples. **Citrus:** all **Berries**: blackberry, blueberry, boysenberry, cranberry, elderberry, loganberry, mulberry, & raspberry (other than strawberry). **Cabbage:** brussel sprout, red, savoy, & Chinese celery (bok choy). **Lettuce:** whole, iceberg, & romaine. **White Potatoes:** peeled/whole.

Table A-2 lists biota categories that will be available for the user to select in the site-specific mode of the PRG and DCC calculators only. There was limited or no data available for most of these biota and, therefore, most do not have default intake rates presented. The consumer-only data for rice and cereal grain comes from Table 12-6 in the 2011 EFH. Both are based on edible, uncooked weight so intake rates for these are only proposed in dry weight. These dry intake rates for rice and grain are not included in the produce totals if the calculator is run in default mode. The default poultry inputs used in the PRG and DCC calculators are for chicken. In the poultry section of site-specific mode, the user will be able to select which poultry to use for the poultry output. The human intake rates of poultry will remain the same regardless of which poultry is selected; however, soil, water, and fodder intake rates by poultry will change. Each of the biota in Table A-2 will only be included in their respective biota total if they are selected in site-specific mode, and the additional data required is provided by the user.

TABLE A-2. ADDITIONAL SITE-SPECIFIC PROPOSED INTAKE RATES

	IR Farmer Child (g/day) (FW)	IR Farmer Adult (g/day) (FW)	IR Resident Child (g/day) (FW)	IR Resident Adult (g/day) (FW)	IR Farmer Child (g/day) (CPW)	IR Farmer Adult (g/day) (CPW)	IR Resident Child (g/day) (CPW)	IR Resident Adult (g/day) (CPW)
Goat Milk	n/a	n/a	n/a	n/a	n/a	n/a	n/a	n/a
Sheep Milk	n/a	n/a	n/a	n/a	n/a	n/a	n/a	n/a
Mutton	n/a	n/a	n/a	n/a	n/a	n/a	n/a	n/a
Goat Meat	n/a	n/a	n/a	n/a	n/a	n/a	n/a	n/a
Duck	46.9	107.4	n/a	n/a	23.2	53.1	n/a	n/a
Turkey	46.9	107.4	n/a	n/a	23.2	53.1	n/a	n/a
Goose	46.9	107.4	n/a	n/a	23.2	53.1	n/a	n/a
Rice Grains	n/a	n/a	n/a	n/a	34.8	88.5	28.8	73.2
Cereal Grains	n/a	n/a	n/a	n/a	46.0	91.9	38.0	76.0

APPENDIX B. TRANSFER FACTOR SOURCE COMPILATION AND APPLICATION

Table B-1 lists all biota available in the PRG and DCC calculators, which TF or BV category will be used for each biota from each source, and the hierarchy used for each biota. The red text elements are on the 'Common Isotopes' list from the PRG and DCC calculators which include; Am, Co, Cs, H, I, Pu, Ra, Rn, Sr, Tc, Th, and U. Transfer Factors from NCRP-123, RADSSL, and RESRAD, are universal soil to plant BVs that are not specific to a particular plant category or type, but rather the element itself. The Baes paper breaks produce BVs into 2 categories. These categories are explained in Appendix E.

TABLE B-1. TRANSFER FACTOR HIERARCHY

	Primary Transfer Factor Category	Primary Transfer Factor Source	Number of Transfer Factors from Primary Source[1]	Secondary Transfer Factor Category	Secondary Transfer Factor Source	Number of Transfer Factors from Secondary Source[1,2]	Tertiary Transfer Factor Category	Tertiary Transfer Factor Source	Number of Transfer Factors from Tertiary Source[1,2,3]
Apples[5]	Woody Tree	IAEA TRS 472	4- Am, Cs, Pu, Sr	Fruit	EA	39-Ag, Au, Ba, Br, Ca, Ce, Cl, Co, Cr, Er, Eu, Fe, Ga, I, In, La, Lu, Mo, Na, Nb, Np, P, Pm, Po, Ra, Rb, Ru, S, Sb, Se, Sm, Tc, Th, Tl, U, V, Y, Zn, Zr	None	NCRP-123, RADSSL, RESRAD, Baes paper	Any elements not previously listed, including H and Rn.
Citrus Fruits[5]	Woody Tree	IAEA TRS 472	4- Am, Cs, Pu, Sr	Fruit	EA	39-Ag, Au, Ba, Br, Ca, Ce, Cl, Co, Cr, Er, Eu, Fe, Ga, I, In, La, Lu, Mo, Na, Nb, Np, P, Pm, Po, Ra, Rb, Ru, S, Sb, Se, Sm, Tc, Th, Tl, U, V, Y, Zn, Zr	None	NCRP-123, RADSSL, RESRAD, Baes paper	Any elements not previously listed, including H and Rn.
Berries[5]	Shrub	IAEA TRS 472	2-Cs, Sr	Fruit	EA	15- Au, Ca, Cm, Er, Ga, I, In, Nb, Np, P, Pm, S, Tc, Tl, Y	None	NCRP-123, RADSSL, RESRAD, Baes paper	Any elements not previously listed, including Am, Co, H, Pu, Ra, Rn, Th, U.
Peaches	Woody Tree	IAEA TRS 472	4- Am, Cs, Pu, Sr	Fruit	EA	39-Ag, Au, Ba, Br, Ca, Ce, Cl, Co, Cr, Er, Eu, Fe, Ga, I, In, La, Lu, Mo, Na, Nb, Np, P, Pm, Po, Ra, Rb, Ru, S, Sb, Se, Sm, Tc, Th, Tl, U, V, Y, Zn, Zr	None	NCRP-123, RADSSL, RESRAD, Baes paper	Any elements not previously listed, including H and Rn.

TABLE B-1. TRANSFER FACTOR HIERARCHY

	Primary Transfer Factor Category	Primary Transfer Factor Source	Number of Transfer Factors from Primary Source[1]	Secondary Transfer Factor Category	Secondary Transfer Factor Source	Number of Transfer Factors from Secondary Source[1,2]	Tertiary Transfer Factor Category	Tertiary Transfer Factor Source	Number of Transfer Factors from Tertiary Source[1,2,3]
Pears	Woody Tree	IAEA TRS 472	4- Am, Cs, Pu, Sr	Fruit	EA	39-Ag, Au, Ba, Br, Ca, Ce, Cl, Co, Cr, Er, Eu, Fe, Ga, I, In, La, Lu, Mo, Na, Nb, Np, P, Pm, Po, Ra, Rb, Ru, S, Sb, Se, Sm, Tc, Th, Tl, U, V, Y, Zn, Zr	None	NCRP-123, RADSSL, RESRAD, Baes paper	Any elements not previously listed, including H and Rn.
Strawberry	Herba-ceous	IAEA TRS 472	4- Am, Cs, Pu, Sr	Fruit	EA	20-Au, Ca, Cm, Er, Ga, I, In, Mn, Mo, Nb, Np, P, Pm, Ru, S, Sb, Tl, V, Y, Zr	None	NCRP-123, RADSSL, RESRAD, Baes paper	Any elements not previously listed, including Co, H, Ra, Rn, Tc, Th, and U.
Asparagus	Leafy Vegetable	IAEA TRS 472	35-Ag, Am, Ba, Ce, Cl, Co, Cr, Cs, Fe, I, K, La, Mn, Mo, Na, Nb, Np, P, Pb, Po, Pr, Pu, Ra, Rb, Ru, Sb, Sm, Sr, Tc, Te, Th, U, Y, Zn, Zr	Green Vegetable	EA	16-Au, Br, Ca, Cm, Er, Eu, Ga, In, Lu, Ni, Pm, S, Se, Tl, V	None	NCRP-123, RADSSL, RESRAD, Baes paper	Any elements not previously listed, including H and Rn.
Beets	Root	IAEA TRS 472	34-Ag, Am, Ba, Ce, Cl, Cm, Co, Cr, Cs, Fe, I, La, Mn, Mo, Na, Nb, Np, P, Pb, Pm, Po, Pr, Pu, Ra, Rb, Ru, Sb, Sr, Tc, Te, Th, U, Y, Zr	Root Vegetable	EA	15- Au, Br, Ca, Er, Eu, Ga, In, Lu, Ni, S, Se, Sm, Tl, V, Zn	None	NCRP-123, RADSSL, RESRAD, Baes paper	Any elements not previously listed, including H and Rn.
Broccoli	Non-Leafy Vegetable	IAEA TRS 472	26-Ag, Am, Cm, Co, Cr, Cs, Fe, I, La, Mn, Na, Nb, Np, P, Pb, Pu, Ra, Ru, Sb, Sr, Te, Th, U, Y, Zn, Zr	Green Vegetable	EA	22- Au, Ba, Br, Ca, Ce, Cl, Er, Eu, Ga, In, Lu, Mo, Ni, Pm, Po, Rb, S, Se, Sm, Tc, Tl, V	None	NCRP-123, RADSSL, RESRAD, Baes paper	Any elements not previously listed, including H and Rn.

TABLE B-1. TRANSFER FACTOR HIERARCHY

	Primary Transfer Factor Category	Primary Transfer Factor Source	Number of Transfer Factors from Primary Source[1]	Secondary Transfer Factor Category	Secondary Transfer Factor Source	Number of Transfer Factors from Secondary Source[1,2]	Tertiary Transfer Factor Category	Tertiary Transfer Factor Source	Number of Transfer Factors from Tertiary Source[1,2,3]
Cabbage[5]	Leafy Vegetable	IAEA TRS 472	35-Ag, Am, Ba, Ce, Cl, Sm, Co, Cr, Cs, Fe, I, K, La, Mn, Mo, Na, Nb, Np, P, Pb, Po, Pr, Pu, Ra, Rb, Ru, Sb, Sr, Tc, Te, Th, U, Y, Zn, Zr	Green Vegetable	EA	16-Au, Br, Ca, Cm, Er, Eu, Ga, In, Lu, Ni, Pm, S, Se, Tl, V	None	NCRP-123, RADSSL, RESRAD, Baes paper	Any elements not previously listed, including H and Rn.
Carrots	Root	IAEA TRS 472	34-Ag, Am, Ba, Ce, Cl, Cm, Co, Cr, Cs, Fe, I, La, Mn, Mo, Na, Nb, Np, P, Pb, Pm, Po, Pr, Pu, Ra, Rb, Ru, Sb, Sr, Tc, Te, Th, U, Y, Zr	Root Vegetable	EA	15- Au, Br, Ca, Er, Eu, Ga, In, Lu, Ni, S, Se, Sm, Tl, V, Zn	None	NCRP-123, RADSSL, RESRAD, Baes paper	Any elements not previously listed, including H and Rn.
Corn	Maize Grain	IAEA TRS 472	14-Cd, Co, Cs, Mn, Np, Pb, Po, Pu, Ra, Sr, Tc, Th, U, Zn	Green Vegetable	EA	34-Ag, Am, Au, Ba, Br, Ca, Ce, Cl, Cm, Cr, Er, Eu, Fe, Ga, I, In, La, Lu, Mo, Na, Nb, Ni, P, Pm, Rb, Ru, S, Sb, Se, Sm, Tl, V, Y, Zr	None	NCRP-123, RADSSL, RESRAD, Baes paper	Any elements not previously listed, including H and Rn.
Cucumbers	Non-Leafy Vegetable	IAEA TRS 472	26-Ag, Am, Cm, Co, Cr, Cs, Fe, I, La, Mn, Na, Nb, Np, P, Pb, Pu, Ra, Ru, Sb, Sr, Te, Th, U, Y, Zn, Zr	Green Vegetable	EA	22- Au, Ba, Br, Ca, Ce, Cl, Er, Eu, Ga, In, Lu, Mo, Ni, Pm, Po, Rb, S, Se, Sm, Tc, Tl, V	None	NCRP-123, RADSSL, RESRAD, Baes paper	Any elements not previously listed, including H and Rn.
Lettuce[5]	Leafy Vegetable	IAEA TRS 472	35-Ag, Am, Ba, Ce, Cl, Sm, Co, Cr, Cs, Fe, I, K, La, Mn, Mo, Na, Nb, Np, P, Pb, Po, Pr, Pu, Ra, Rb, Ru, Sb, Sr, Tc, Te, Th, U, Y, Zn, Zr	Green Vegetable	EA	16-Au, Br, Ca, Cm, Er, Eu, Ga, In, Lu, Ni, Pm, S, Se, Tl, V	None	NCRP-123, RADSSL, RESRAD, Baes paper	Any elements not previously listed, including H and Rn.

TABLE B-1. TRANSFER FACTOR HIERARCHY

	Primary Transfer Factor Category	Primary Transfer Factor Source	Number of Transfer Factors from Primary Source[1]	Secondary Transfer Factor Category	Secondary Transfer Factor Source	Number of Transfer Factors from Secondary Source[1,2]	Tertiary Transfer Factor Category	Tertiary Transfer Factor Source	Number of Transfer Factors from Tertiary Source[1,2,3]
Lima Beans	Legume Seed	IAEA TRS 472	24-Am, Cd, Ce, Cl, Cm, Co, Cs, Fe, I, La, Mn, Np, Pb, Pm, Po, Pu, Ra, Ru, Sb, Sr, Tc, Th, U, Zn	Green Vegetable	EA	24-Ag, Au, Ba, Br, Ca, Cr, Er, Eu, Ga, In, Lu, Mo, Na, Nb, Ni, P, Rb, S, Se, Sm, Tl, V, Y, Zr	None	NCRP-123, RADSSL, RESRAD, Baes paper	Any elements not previously listed, including H and Rn.
Okra	Non-Leafy Vegetable	IAEA TRS 472	26-Ag, Am, Cm, Co, Cr, Cs, Fe, I, La, Mn, Na, Nb, Np, P, Pb, Pu, Ra, Ru, Sb, Sr, Te, Th, U, Y, Zn, Zr	Green Vegetable	EA	22- Au, Ba, Br, Ca, Ce, Cl, Er, Eu, Ga, In, Lu, Mo, Ni, Pm, Po, Rb, S, Se, Sm, Tc, Tl, V	None	NCRP-123, RADSSL, RESRAD, Baes paper	Any elements not previously listed, including H and Rn.
Onions	Non-Leafy Vegetable	IAEA TRS 472	26-Ag, Am, Cm, Co, Cr, Cs, Fe, I, La, Mn, Na, Nb, Np, P, Pb, Pu, Ra, Ru, Sb, Sr, Te, Th, U, Y, Zn, Zr	Root Vegetable	EA	22- Au, Ba, Br, Ca, Ce, Cl, Er, Eu, Ga, In, Lu, Mo, Ni, Pm, Po, Rb, S, Se, Sm, Tc, Tl, V	None	NCRP-123, RADSSL, RESRAD, Baes paper	Any elements not previously listed, including H and Rn.
Peas	Legume Seed	IAEA TRS 472	24-Am, Cd, Ce, Cl, Cm, Co, Cs, Fe, I, La, Mn, Np, Pb, Pm, Po, Pu, Ra, Ru, Sb, Sr, Tc, Th, U, Zn	Green Vegetable	EA	24-Ag, Au, Ba, Br, Ca, Cr, Er, Eu, Ga, In, Lu, Mo, Na, Nb, Ni, P, Rb, S, Se, Sm, Tl, V, Y, Zr	None	NCRP-123, RADSSL, RESRAD, Baes paper	Any elements not previously listed, including H and Rn.
Pumpkins	Non-Leafy Vegetable	IAEA TRS 472	26-Ag, Am, Cm, Co, Cr, Cs, Fe, I, La, Mn, Na, Nb, Np, P, Pb, Pu, Ra, Ru, Sb, Sr, Te, Th, U, Y, Zn, Zr	Green Vegetable	EA	22- Au, Ba, Br, Ca, Ce, Cl, Er, Eu, Ga, In, Lu, Mo, Ni, Pm, Po, Rb, S, Se, Sm, Tc, Tl, V	None	NCRP-123, RADSSL, RESRAD, Baes paper	Any elements not previously listed, including H and Rn.
Snap Beans	Legume seed	IAEA TRS 472	24-Am, Cd, Ce, Cl, Cm, Co, Cs, Fe, I, La, Mn, Np, Pb, Pm, Po, Pu, Ra, Ru, Sb, Sr, Tc, Th, U, Zn	Green Vegetable	EA	24-Ag, Au, Ba, Br, Ca, Cr, Er, Eu, Ga, In, Lu, Mo, Na, Nb, Ni, P, Rb, S, Se, Sm, Tl, V, Y, Zr	None	NCRP-123, RADSSL, RESRAD, Baes paper	Any elements not previously listed, including H and Rn.
Tomatoes	Non-Leafy Vegetable	IAEA TRS 472	26-Ag, Am, Cm, Co, Cr, Cs, Fe, I, La, Mn, Na, Nb, Np, P, Pb, Pu, Ra, Ru, Sb, Sr, Te, Th, U, Y, Zn, Zr	Green Vegetable	EA	22- Au, Ba, Br, Ca, Ce, Cl, Er, Eu, Ga, In, Lu, Mo, Ni, Pm, Po, Rb, S, Se, Sm, Tc, Tl, V	None	NCRP-123, RADSSL, RESRAD, Baes paper	Any elements not previously listed, including H and Rn.

TABLE B-1. TRANSFER FACTOR HIERARCHY

	Primary Transfer Factor Category	Primary Transfer Factor Source	Number of Transfer Factors from Primary Source[1]	Secondary Transfer Factor Category	Secondary Transfer Factor Source	Number of Transfer Factors from Secondary Source[1,2]	Tertiary Transfer Factor Category	Tertiary Transfer Factor Source	Number of Transfer Factors from Tertiary Source[1,2,3]
White Potatoes[5]	Tuber	IAEA TRS 472	30-Am, Ba, Cd, Ce, Cm, Co, Cr, Cs, Fe, I, La, Mn, Na, Nb, Np, P, Pb, Pm, Po, Pu, Ra, Ru, Sr, Tc, Te, Th, U, Y, Zn, Zr	Root Vegetable	EA	19-Ag, Au, Br, Ca, Cl, Er, Eu, Ga, In, Lu, Mo, Ni, Rb, S, Sb, Se, Sm, Tl, V	None	NCRP-123, RADSSL, RESRAD, Baes paper	Any elements not previously listed, including H and Rn.
Dairy	Beef Milk	IAEA TRS 472	31-Am, Ba, Be, Ca, Cd, Ce, Co, Cr, Cs, Fe, I, Mn, Mo, Na, Nb, Ni, P, Pb, Po, Pu, Ra, Ru, S, Sb, Se, Sr, Te, U, W, Zn, Zr	Beef Milk	EA	21-Ag, Br, Ce, Cl, Cm, Er, Eu, Ga, In, La, Lu, Np, Pm, Rb, Sm, Tc, Th, Tl, V, Y	None	NCRP-123, RADSSL, RESRAD, Baes paper	Any elements not previously listed, including H and Rn.
Beef	Beef	IAEA TRS 472	26-Am, Ba, Ca, Cd, Cl, Co, Cs, Fe, I, La, Mn, Mo, Na, Nb, P, Pb, Pu, Ra, Ru, Sb, Sr, Te, Th, U, Zn, Zr	Beef	EA	21-Ag, Br, Ce, Cm, Cr, Er, Eu, Ga, In, Lu, Ni, Np, Pm, Rb, S, Se, Sm, Tc, Tl, V, Y	None	NCRP-123, RADSSL, RESRAD, Baes paper	Any elements not previously listed, including H, Rn, and Tc.
Swine	Swine	IAEA TRS 472	19-Ag, Am, Ca, Cd, Ce, Co, Cs, Cu, Fe, I, Mn, Nb, P, Pu, Ru, Se, Sr, Tc, U, Zn	None	NCRP-123, RADSSL, RESRAD, Baes paper	Any elements not previously listed, including H and Rn.	None	None	None
Poultry	Poultry	IAEA TRS 472	30-Ag, Am, Ba, Ca, Cd, Co, Cs, Cu, Fe, Hg I, La, Mn, Mo, Na, Nb, Nd, Pm, Po, Pr, Pu, Ru, Se, Sr, Tc, Te, U, Y, Zn, Zr	None	NCRP-123, RADSSL, RESRAD, Baes paper	Any elements not previously listed, including H, Ra, Rn, and Th.	None	None	None
Egg	Egg	IAEA TRS 472	31-Am, Ba, Ca, Cd, Ce, Co, Cs, Cu, Fe, I, K, La, Mn, Mo, Na, Nb, Nd, P, Pm, Po, Pr, Pu, Ru, Se, Sr, Tc, Te, U, Y, Zn, Zr	None	NCRP-123, RADSSL, RESRAD, Baes paper	Any elements not previously listed, including H, Ra, Rn, and Th.	None	None	None

TABLE B-1. TRANSFER FACTOR HIERARCHY

	Primary Transfer Factor Category	Primary Transfer Factor Source	Number of Transfer Factors from Primary Source[1]	Secondary Transfer Factor Category	Secondary Transfer Factor Source	Number of Transfer Factors from Secondary Source[1,2]	Tertiary Transfer Factor Category	Tertiary Transfer Factor Source	Number of Transfer Factors from Tertiary Source[1,2,3]
Fish	Fish whole body	IAEA TRS 472	49-Ag, Al, Am, As, Au, Ba, Br, C, Ca, Ce, Cl, Co, Cr, Cs, Cu, Dy, Eu, Fe, Hf, Hg, I, K, La, Mg, Mn, Mo, Na, Ni, P, Pb, Po, Pu, Ra, Rb, Ru, Sb, Sc, Se, Sr, Tb, Te, Th, Ti, Tl, U, V, Y, Zn, Zr	Fresh Water Fish Whole Body	IAEA TRS 479	2-Cd, Sn	None	NCRP-123, RADSSL, RESRAD, Baes paper	Any elements not previously listed, including H, Rn, and Tc.
Goat Milk	Goat Milk	IAEA TRS 472	27-Am, Ba, Ca, Cd, Ce, Co, Cr, Cs, Fe, I, Mn, Mo, Na, Nb, Ni, Np, P, Pb, Pm, Po, S, Se, Sr, Te, U, Zn, Zr	None	NCRP-123, RADSSL, RESRAD, Baes paper	Any elements not previously listed, including H, Pu, Ra, Rn, Tc, and Th.	None	None	None
Sheep Milk	Sheep Milk	IAEA TRS 472	18-Ba, Ca, Cd, Co, Cr, Cs, Fe, I, Mn, Na, Ni, P, Pb, Pu, S, Sr, Te, Zn	None	NCRP-123, RADSSL, RESRAD, Baes paper	Any elements not previously listed, including Am, H, Ra, Rn, Tc, Th, and U.	None	None	None
Sheep Meat	Mutton	IAEA TRS 472	14-Ag, Am, Cd, Ce, Co, Cs, I, Mn, Na, Pu, Ru, S, Sr, Zn	Sheep	UK-EA	21-Au, Ba, Br, Ca, Cr, Er, Eu, Ga, In, Lu, Mo, Nb, Ni, P, Rb, Se, Sm, Tl, V, Y, Zr	None	NCRP-123, RADSSL, RESRAD, Baes paper	Any elements not previously listed, including H, Ra, Rn, Tc, Th, and U.
Goat Meat	Goat	IAEA TRS 472	7-Ba, Cs, Nb, Sr, Te, Y, Zr	None	NCRP-123, RADSSL, RESRAD, Baes paper	Any elements not previously listed, including Co, H, I, Rn, Tc, and U.	None	None	None
Rice[4]	Rice	IAEA TRS 472	12- Co, Cs, I, Mn, Pb, Po, Ra, Sr, Tc, Th, U, Zn	None	NCRP-123, RADSSL, RESRAD, Baes paper	Any elements not previously listed, including Am, H, Pu, and Rn.	None	None	None

TABLE B-1. TRANSFER FACTOR HIERARCHY

	Primary Transfer Factor Category	Primary Transfer Factor Source	Number of Transfer Factors from Primary Source[1]	Secondary Transfer Factor Category	Secondary Transfer Factor Source	Number of Transfer Factors from Secondary Source[1,2]	Tertiary Transfer Factor Category	Tertiary Transfer Factor Source	Number of Transfer Factors from Tertiary Source[1,2,3]
Cereal Grains	Cereal Grain	IAEA TRS 472	37- Am, Ba, Cd, Ce, Cl, Cm, Co, Cr, Cs, Fe, I, K, La, Mn, Mo, Na, Nb, Ni, Np, P, Pb, Pm, Po, Pr, Pu, Ra, Rb, Ru, Sb, Sr, Tc, Te, Th, U, Y, Zn, Zr	None	NCRP-123, RADSSL, RESRAD, Baes paper	Any elements not previously listed, including H and Rn.	None	None	None

1. Red elements are on the 'Common Isotopes' list of EPA calculator webpages. (Am, Co, Cs, H, I, Pu, Ra, Rn, Sr, Tc, Th, U)
2. Transfer Factors from NCRP-123, RADSSL, and RESRAD are universal soil to plant Transfer Factors that are not specific to a particular plant category or type, but rather the element itself.
3. The Baes paper BVs are divided into two categories. Appendix E shows how these categories are applied to produce.
4. TRS-472 provides two differing transfer factor derivations for rice. The values derived from radionuclide studies are given in Table 22; the values derived from stable element data are presented in Table 23 (TRS-472, pg. 78). In the event that a transfer factor was provided for the same element in both tables, the most protective transfer factor was used.
5. **Apples:** with/without peel & crabapples. **Citrus:** all **Berries**: blackberry, blueberry, boysenberry, cranberry, elderberry, loganberry, mulberry, & raspberry (other than strawberry). **Cabbage:** brussel sprout, red, savoy, & Chinese celery (bok choy). **Lettuce:** whole, iceberg, & romaine. **White Potatoes:** peeled/whole.

APPENDIX C. APPLICATION OF MASS LOADING FACTORS

Table C-1 below lists the MLFs that will be applied to each individual produce as well as pasture. The first 3 columns after the first column list the initial MLF, the initial MLF units, and its respective source. The unit conversion column shows the initial MLF in units of grams. If the initial MLF was already given in grams, then the column lists none. Once all the MLFs were converted to grams, a moisture content conversion factor was applied to convert the dry plant MLFs to fresh plant MLFs. The last two columns list the final MLFs and their units that will be used in the PRG and DCC calculators.

TABLE C-1. MASS LOADING FACTORS

	Initial MLF	Initial MLF units	Initial MLF Source	Unit Conversion	Units After Mass Conversion	Moisture Content Conversion Factor	Moisture Content Conversion Factor Source	MLF (Soil Mass Loading Factor)	Final MLF Units
Apples[2]	0.001	g dry soil / g dry plant	EA (2009)	None	g dry soil / g dry plant	0.160	EA (2009)	1.60E-04	g dry soil / g fresh plant
Citrus Fruits[2]	0.001	g dry soil / g dry plant	EA (2009)	None	g dry soil / g dry plant	0.157	EA (2009)	1.57E-04	g dry soil / g fresh plant
Berries[2]	0.001	g dry soil / g dry plant	EA (2009)	None	g dry soil / g dry plant	0.166	EA (2009)	1.66E-04	g dry soil / g fresh plant
Peaches	0.001	g dry soil / g dry plant	EA (2009)	None	g dry soil / g dry plant	0.150	EA (2009)	1.50E-04	g dry soil / g fresh plant
Pears	0.001	g dry soil / g dry plant	EA (2009)	None	g dry soil / g dry plant	0.160	EA (2009)	1.60E-04	g dry soil / g fresh plant
Strawberry	0.001	g dry soil / g dry plant	EA (2009)	None	g dry soil / g dry plant	0.080	EA (2009)	8.00E-05	g dry soil / g fresh plant
Asparagus	0.001	g dry soil / g dry plant	EA (2009)	None	g dry soil / g dry plant	0.079	EA (2009)	7.90E-05	g dry soil / g fresh plant
Beets	0.001	g dry soil / g dry plant	EA (2009)	None	g dry soil / g dry plant	0.138	EA (2009)	1.38E-04	g dry soil / g fresh plant
Broccoli	10	mg dry soil / g dry plant	Hinton (1992)	0.01	g dry soil / g dry plant	0.101	SSG	1.01E-03	g dry soil / g fresh plant
Cabbage[2]	0.001	g dry soil / g dry plant	EA (2009)	None	g dry soil / g dry plant	0.105	EA (2009)	1.05E-04	g dry soil / g fresh plant
Carrots	0.001	g dry soil / g dry plant	EA (2009)	None	g dry soil / g dry plant	0.097	EA (2009)	9.70E-05	g dry soil / g fresh plant
Corn	1.7	mg dry soil / g dry plant	Pinder & McLeod	0.0017	g dry soil / g dry plant	0.085	SSG	1.45E-04	g dry soil / g fresh plant
Cucumbers	0.001	g dry soil / g dry plant	EA (2009)	None	g dry soil / g dry plant	0.040	EA (2009)	4.00E-05	g dry soil / g fresh plant
Lettuce[2]	260	mg dry soil / g dry plant	Hinton (1992)	0.26	g dry soil / g dry plant	0.052	SSG	1.35E-02	g dry soil / g fresh plant
Lima Beans	45	mg dry soil / g dry plant	Hinton (1992)	0.045	g dry soil / g dry plant	0.085	SSG	3.83E-03	g dry soil / g fresh plant

TABLE C-1. MASS LOADING FACTORS

	Initial MLF	Initial MLF units	Initial MLF Source	Unit Conversion	Units After Mass Conversion	Moisture Content Conversion Factor	Moisture Content Conversion Factor Source	MLF (Soil Mass Loading Factor)	Final MLF Units
Okra	0.001	g dry soil / g dry plant	EA (2009)	None	g dry soil / g dry plant	0.080	EA (2009)	8.00E-05	g dry soil / g fresh plant
Onions	0.001	g dry soil / g dry plant	EA (2009)	None	g dry soil / g dry plant	0.097	EA (2009)	9.70E-05	g dry soil / g fresh plant
Peas	0.001	g dry soil / g dry plant	EA (2009)	None	g dry soil / g dry plant	0.178	EA (2009)	1.78E-04	g dry soil / g fresh plant
Pumpkins	0.001	g dry soil / g dry plant	EA (2009)	None	g dry soil / g dry plant	0.058	EA (2009)	5.80E-05	g dry soil / g fresh plant
Snap Beans[1]	45	mg dry soil / g dry plant	Hinton (1992)	0.045	g dry soil / g dry plant	0.111	SSG	5.00E-03	g dry soil / g fresh plant
Tomatoes	30	mg dry soil / g dry plant	Hinton (1992)	0.030	g dry soil / g dry plant	0.059	SSG	1.59E-03	g dry soil / g fresh plant
White Potatoes[2]	0.001	g dry soil / g dry plant	EA (2009)	None	g dry soil / g dry plant	0.210	EA (2009)	2.10E-04	g dry soil / g fresh plant
Pasture	250	mg dry soil / g dry plant	Hinton (1992)	0.25	g dry soil / g dry plant	N/A	N/A	2.50E-01	g dry soil / g fresh plant
Cereal Grains[1]	250	mg dry soil / g dry plant	Hinton (1992)	0.25	g dry soil / g dry plant	N/A	N/A	2.50E-01	g dry soil / g fresh plant
Rice[1]	250	mg dry soil / g dry plant	Hinton (1992)	0.25	g dry soil / g dry plant	N/A	N/A	2.50E-01	g dry soil / g fresh plant

1. Bush beans were a surrogate for lima beans and snap beans. Pasture was a surrogate for cereal grains and rice.
2. **Apples:** with/without peel & crabapples. **Citrus:** all **Berries**: blackberry, blueberry, boysenberry, cranberry, elderberry, loganberry, mulberry, & raspberry (other than strawberry). **Cabbage:** brussel sprout, red, savoy, & Chinese celery (bok choy). **Lettuce:** whole, iceberg, & romaine. **White Potatoes:** peeled/whole.

APPENDIX D. AGE SEGMENT AND BODY WEIGHT SENSIVITY ANALYSIS

To address concerns regarding which age segment should be used to derive adult intake rates and whether a single body weight or age-specific body weight should be used to derive both child and adult intake rates, a sensitivity analysis was conducted. The purpose of the analysis was to determine whether a particular age segment or body weight had a significant effect.

Intake rates for adults were calculated for each age segment. Both a single and age-specific body weight were then applied to each calculated intake rate. Figure D-1 shows the general and age-adjusted body weights that were used for each age segment.

Table D-1 demonstrates the effect of using different body weights to determine intake rates in children. It was determined that the effect of using an age adjusted body weight in place of a general body weight was slightly less protective, a majority of the time.

Table D-2 demonstrates the effect of using both a general and age-adjusted body weight and different age segments for adults. It was determined that using a general body weight was the most protective, a majority of the time, for adults. When applying a general body weight, the most protective intake rates came from the age segment 6-70. Since, these intake rates are negligibly (5 g/day or less) larger than the age segment 21-70 and, according to the OSWER Directive 9200.1-120, an adult is 21+ years with a lifetime of 70 years, it was decided that the intake rates from the age segment 21-70 would be used.

Figure D-1 below displays the body weights used for each age segment in the sensitivity analysis. Age is in years and body weight is in kg.

	Body Weight	
Age	General	Adjusted
00<01	15	7.8
01<03	15	11.4
03<06	15	17.0
06<12	15	31.8
06<12	80	31.8
12<20	80	62.4
20<40	80	79.6
40+	80	80.0
Mean	68.7	68.7

FIGURE D-1. BODY WEIGHTS

Table D-1: Green cells represent the most protective intake rates across all age segments and body weights.

TABLE D-1. CHILD INTAKE RATE SENSITIVITY TEST

	Child Body Weight (kg)	Farmer Child (g/day) (FW)	Resident Child (g/day) (FW)	Child Body Weight (kg)	Farmer Child (g/day) (FW)	Resident Child (g/day) (FW)
Apples	General	82.9	72.2	Age Adjusted	70.0	60.9
Citrus Fruits	General	194.1	194.1	Age Adjusted	183.3	183.3
Berries	General	23.9	23.9	Age Adjusted	22.2	22.2
Peaches	General	99.3	111.4	Age Adjusted	81.3	91.2
Pears	General	76.9	66.7	Age Adjusted	64.3	55.7
Strawberries	General	25.3	25.3	Age Adjusted	23.8	23.8
Asparagus	General	12.0	12.0	Age Adjusted	10.6	10.6
Beets	General	3.9	3.9	Age Adjusted	4.5	4.5
Broccoli	General	14.4	13.1	Age Adjusted	13.3	12.0
Cabbage	General	11.5	12.3	Age Adjusted	10.8	11.6
Carrots	General	13.3	14.9	Age Adjusted	12.2	13.6
Corn	General	32.7	23.8	Age Adjusted	28.5	20.8
Cucumbers	General	16.9	25.4	Age Adjusted	16.9	25.4
Lettuce	General	4.2	4.2	Age Adjusted	4.3	4.3
Lima Beans	General	6.5	6.5	Age Adjusted	6.0	6.0
Okra	General	5.3	5.3	Age Adjusted	5.5	5.5
Onions	General	7.2	5.8	Age Adjusted	6.9	5.5
Peas	General	28.7	32.1	Age Adjusted	22.3	25.0
Pumpkins	General	45.2	45.2	Age Adjusted	27.1	27.1
Snap Beans	General	27.5	27.3	Age Adjusted	23.6	23.5
Tomatoes	General	34.9	29.7	Age Adjusted	31.6	26.9
White Potatoes	General	57.3	51.7	Age Adjusted	53.5	48.3
Dairy	General	994.7	n/a	Age Adjusted	903.4	n/a
Beef	General	62.8	n/a	Age Adjusted	60.7	n/a
Swine	General	33.7	n/a	Age Adjusted	32.6	n/a
Poultry	General	46.9	n/a	Age Adjusted	44.1	n/a
Egg	General	31.7	n/a	Age Adjusted	28.1	n/a
Fish	General	57.4	n/a	Age Adjusted	55.9	n/a

Table D-2: Green cells represent the most protective intake rates across all age segments and body weights.

TABLE D-2. ADULT INTAKE RATE SENSITIVITY TEST

	Adult Body Weight (kg)	Farmer 6-40 (g/day) (FW)	Farmer 6-70 (g/day) (FW)	Farmer 21-70 (g/day) (FW)	Resident 6-26 (g/day) (FW)	Resident 6-70 (g/day) (FW)	Resident 21-70 (g/day) (FW)	Adult Body Weight (kg)	Farmer 6-40 (g/day) (FW)	Farmer 6-70 (g/day) (FW)	Farmer 21-70 (g/day) (FW)	Resident 6-26 (g/day) (FW)	Resident 6-70 (g/day) (FW)	Resident 21-70 (g/day) (FW)
Apples	General	81.2	87.3	84.7	74.2	76.0	73.7	Age Adjusted	66.5	79.2	84.6	52.7	69.0	84.6
Citrus Fruits	General	270.5	310.6	309.4	279.8	310.6	309.4	Age Adjusted	218.0	281.8	308.9	191.4	281.8	308.9
Berries	General	33.3	36.2	35.4	34.8	36.2	35.4	Age Adjusted	26.9	32.7	35.3	23.9	32.7	35.3
Peaches	General	102.3	109.0	103.1	125.0	122.2	115.7	Age Adjusted	78.5	95.9	102.9	79.9	107.6	102.9
Pears	General	61.0	62.2	59.9	54.8	53.9	51.9	Age Adjusted	48.2	55.1	59.8	36.1	47.8	59.8
Strawberries	General	35.1	42.8	40.5	40.9	42.8	40.5	Age Adjusted	26.9	38.3	40.5	26.9	38.3	40.5
Asparagus	General	32.4	35.2	39.3	25.6	35.2	39.3	Age Adjusted	28.5	33.0	39.2	19.1	33.0	39.2
Beets	General	19.5	27.3	33.9	11.0	27.3	33.9	Age Adjusted	19.4	27.3	33.9	10.9	27.3	33.9
Broccoli	General	30.7	33.9	35.3	25.8	30.7	32.0	Age Adjusted	26.3	31.5	35.3	19.2	28.5	35.3
Cabbage	General	66.3	78.3	85.7	60.8	84.1	92.1	Age Adjusted	58.8	74.1	85.5	47.3	79.6	85.5
Carrots	General	22.0	25.1	24.4	26.8	28.2	27.3	Age Adjusted	17.3	22.6	24.3	17.8	25.3	24.3
Corn	General	70.3	82.2	82.0	53.3	59.9	59.8	Age Adjusted	57.9	75.4	81.9	38.1	55.0	81.9
Cucumbers	General	37.2	54.1	54.9	62.6	81.3	82.4	Age Adjusted	29.1	49.7	54.8	42.1	74.7	54.8
Lettuce	General	31.7	35.6	37.5	29.0	35.6	37.5	Age Adjusted	28.1	33.6	37.4	23.0	33.6	37.4
Lima Beans	General	24.9	30.5	33.8	20.8	30.5	33.8	Age Adjusted	22.8	29.3	33.7	17.3	29.3	33.7
Okra	General	28.4	30.6	30.2	28.9	30.6	30.2	Age Adjusted	24.8	28.6	30.2	22.9	28.6	30.2
Onions	General	27.5	27.2	27.2	21.2	21.8	21.8	Age Adjusted	23.5	25.1	27.2	15.9	20.0	27.2
Peas	General	31.9	32.9	31.7	37.2	36.8	35.4	Age Adjusted	26.4	29.9	31.6	26.8	33.4	31.6
Pumpkins	General	57.9	62.4	64.8	53.9	62.4	64.8	Age Adjusted	52.0	59.2	64.6	44.1	59.2	64.6
Snap Beans	General	52.8	55.9	54.2	54.8	55.6	53.9	Age Adjusted	43.7	50.9	54.1	39.6	50.6	54.1
Tomatoes	General	90.6	97.3	94.2	81.4	82.9	80.3	Age Adjusted	72.9	87.6	94.0	56.0	74.6	94.0
White Potatoes	General	123.7	143.7	141.8	118.1	129.6	127.8	Age Adjusted	100.5	131.0	141.6	82.9	118.1	141.6
Dairy	General	1122.8	917.7	676.4	n/a	n/a	n/a	Age Adjusted	815.2	749.0	674.9	n/a	n/a	n/a
Beef	General	191.1	178.7	165.3	n/a	n/a	n/a	Age Adjusted	154.2	158.5	165.0	n/a	n/a	n/a
Swine	General	110.9	101.2	92.5	n/a	n/a	n/a	Age Adjusted	91.3	90.4	92.3	n/a	n/a	n/a
Poultry	General	115.4	118.1	107.4	n/a	n/a	n/a	Age Adjusted	91.7	105.1	107.2	n/a	n/a	n/a
Egg	General	65.1	62.8	59.6	n/a	n/a	n/a	Age Adjusted	53.7	56.6	59.5	n/a	n/a	n/a
Fish	General	885.5	863.0	831.8	n/a	n/a	n/a	Age Adjusted	734.5	780.2	830.0	n/a	n/a	n/a

Table D-3: As indicated by the yellow cells, generally, the most protective intake rates are those calculated using a general body weight and age segment of 21-70.

TABLE D-3. RESULTS OF SENSITIVITY TESTS

	Total # of Green Cells	% Green Cells in Each Body Weight Category	# of Green Cells in Age Segments 6-26 and/or 6-30	% Green Cells in Age Segments 6-26 and/or 6-30	# of Green Cells in Age Segment 6-70	% Green Cells in Age Segment 6-70	# of Green Cells in Age Segment 21-70	% Green Cells in Age Segment 21-70	Most Protective Age Segment
General BW	43	81.1%	8	18.6%	20	46.5%	15	34.9%	**6-70**
Age-Adjusted BW	10	18.9%	0	0.0%	0	0.0%	10	100.0%	**21-70**
Both BW	53	100.0%	8	15.1%	20	37.7%	25	47.2%	**21-70**
Most Protective BW		**General**		**General**		**General**		**Age-Adjusted**	

APPENDIX E. BAES PRODUCE CATEGORIES

Figure E-1: The flow chart below illustrates how Leafy Vegetables use B_v whereas Exposed Produce, Protected Produce, and Grains use B_r.

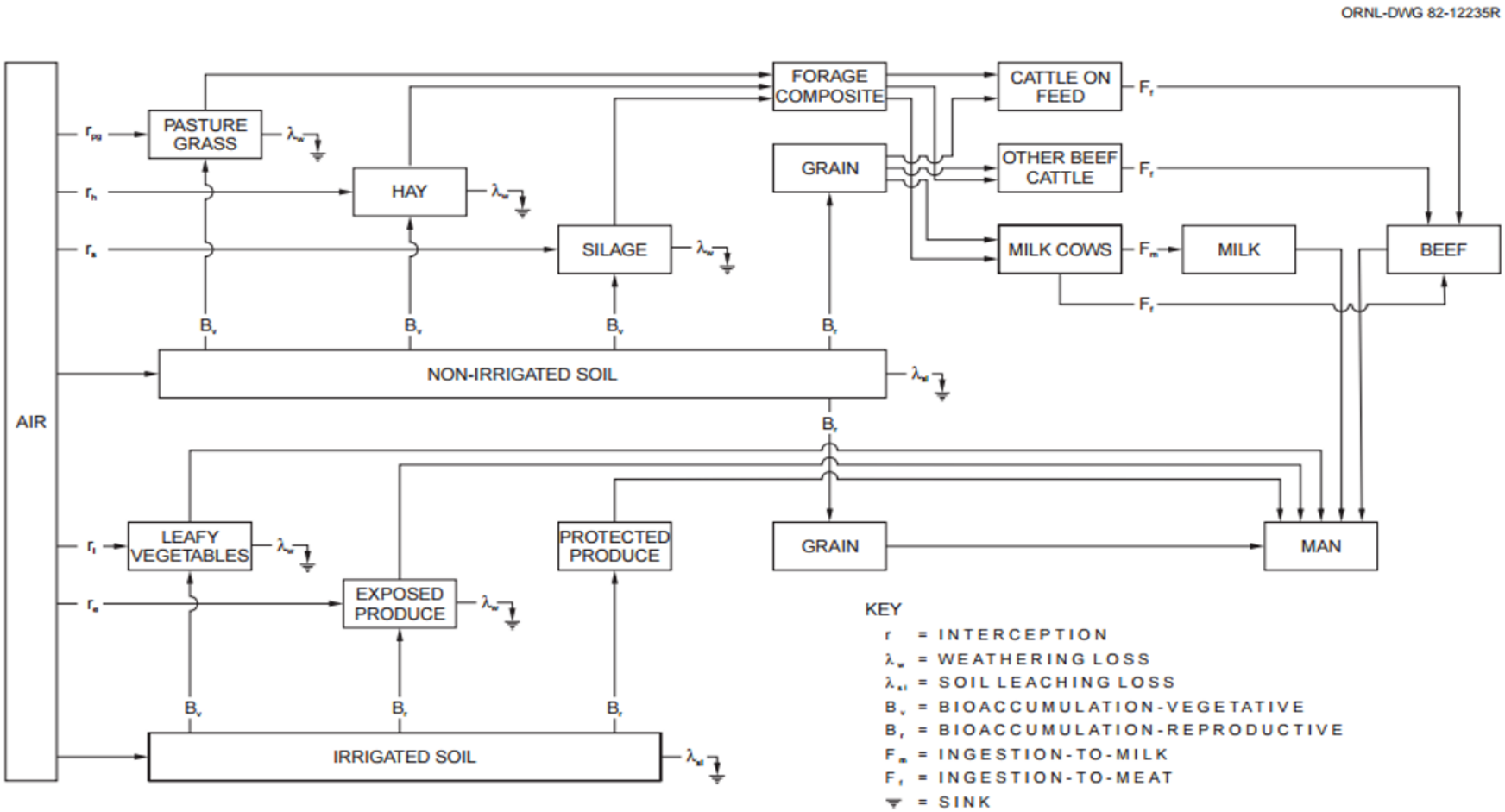

FIGURE E-1. BAES SOIL TO PLANT TRANSFER FACTOR FLOW CHART

Table F-1 below shows how these values are applied to the 24 produce types that are now available in the PRG and DCC calculators. For simplicity, the PRG and DCC calculators refer to all soil to plant transfer factors as B_v.

TABLE E-1. PRODUCE DELINEATION FOR BAES BV'S

	Produce Category	Bv or Br
Apples[1]	Exposed	B_r (exposed produce)
Citrus Fruits[1]	Protected	B_r (protected produce)
Berries[1]	Exposed	B_r (exposed produce)
Peaches	Exposed	B_r (exposed produce)
Pears	Exposed	B_r (exposed produce)
Strawberry	Exposed	B_r (exposed produce)
Asparagus	Exposed	B_r (exposed produce)
Beets[3]	Protected	B_r (protected produce)
Broccoli	Leafy	B_v (leafy vegetable)
Cabbage[1]	Leafy	B_v (leafy vegetable)
Carrots	Protected	B_r (protected produce)
Corn	Grain	B_r (protected produce)
Cucumbers	Exposed	B_r (exposed produce)
Lettuce[1]	Leafy	B_v (leafy vegetable)
Lima Beans	Protected	B_r (protected produce)
Okra	Exposed	B_r (exposed produce)
Onions	Protected	B_r (protected produce)
Peas	Protected	B_r (protected produce)
Pumpkins[2]	Exposed	B_r (exposed produce)
Snap Beans	Exposed	B_r (exposed produce)
Tomatoes	Protected	B_r (exposed produce)
White Potatoes[1]	Protected	B_r (protected produce)
Cereal Grains	Grain	B_r (grain)
Rice	Grain	B_r (grain)

1. **Apples:** with/without peel & crabapples. **Citrus:** all **Berries**: blackberry, blueberry, boysenberry, cranberry, elderberry, loganberry, mulberry, & raspberry (other than strawberry). **Cabbage:** brussel sprout, red, savoy, & Chinese celery (bok choy). **Lettuce:** whole, iceberg, & romaine. **White Potatoes:** peeled/whole.
2. In the BAES document page 13, paragraph 7, sentence 2 refers to a B_r for pumpkin. Pumpkin is also considered a squash, which is an exposed produce according to Table 2.3.
3. According to Table 2.3, Sugarbeets are protected produce. Since sugarbeets are the same species as table beets (Beta Vulgaris L), the same BV is used.

Figure E-2 is Table 2.3 from BAES. This table was used to determine which of the produce categories each of the individual produce, offered in the PRG and DCC calculators, belongs to and, therefore, which BAES soil to plant BV to use.

Table 2.3. Dry-to-wet weight conversion factors for exposed produce, protected produce, and grains

Vegetable	Conversion factor[a]	Weighting factor[b]	Reference	Vegetable	Conversion factor	Weighting factor	Reference
Exposed produce				Protected produce			
Apple	0.159	15.4	14	Onion	0.125	3.6	14
Asparagus	0.070	0.6	14	Orange	0.128	22.8	14
Bushberries	0.151	1.6	14	Peanut	0.920	3.4	38
Cherry	0.170	0.7	14	Peas	0.257	0.4	14
Cucumber	0.039	4.0	14	Potato	0.222	33.7	14
Eggplant	0.073	0.1	14	Sugarbeet	0.164	6.5	13
Grape	0.181	20.2	14	Sugarcane	0.232	5.5	13
Peach	0.131	6.9	14	Sweet corn	0.261	6.0	14
Pear	0.173	3.5	14	Sweet potato	0.315	1.5	14
Plums and prunes	0.540	3.1	14	Tree nuts	0.967	0.4	14
Sweet pepper	0.074	1.3	14	Watermelon	0.079	2.6	14
Snap bean	0.111	0.7	14				
Squash	0.082	1.8	14	Weighted average	0.222		
Strawberry	0.101	1.3	14				
Tomato	0.059	38.8	14	Grains			
				Barley	0.889	10.1	14
Weighted average	0.126			Corn (for meal)	0.895	37.7	38
				Oats	0.917	2.3	14
Protected produce				Rye	0.890	0.5	14
Bean (dry)	0.878	2.2	14	Soybean	0.925	5.3	14
Cantaloupe	0.060	1.1	14	Wheat	0.875	44.0	14
Carrot	0.118	2.4	14				
Grapefruit	0.112	5.5	14	Weighted average	0.888		
Lemon	0.107	2.4	14				

FIGURE E-2. BAES PRODUCE CATEGORIES

Figure E-3 is Table 3.1 from BAES. This table was used to determine which of the produce categories each of the individual produce, offered in the PRG and DCC calculators, belongs to and, therefore, which soil to plant BV to use from the Baes paper.

Table 3.1. Weighting factors for leafy vegetable interception fraction model simulation

Leafy vegetable	Quantity planted (km^2)	Percent	Weight factor
Lettuce	948	42	
cos			14
head			14
leaf			14
Cabbage	367	16	
early			6
late			5
Chinese			5
Greens	246	11	
collards			3
kale			3
spinach			3
New Zealand spinach			2
Broccoli	176	8	
sprouting			4
raab			4
Mint	160	7	7
Celery	140	6	6
Cauliflower	113	5	5
Green onions	59.3	3	3
Escarole	33.6	2	
chicory			1
endive			1
Brussels sprouts	24.8	1	1
Total	2267.7	100	100

FIGURE E-3. BAES LEAFY VEGETABLE CATEGORY

Figure E-4 is Table 3.2 from BAES. This table was used to determine which of the produce categories each of the individual produce offered in the PRG and DCC calculators belongs to and, therefore, which soil to plant BV to use from the Baes paper.

Table 3.2. Relative importance of various exposed produce in the U.S.

Vegetable	Quantity planted (km^2)	Percent of category	Percent of sub-category
Non-citrus tree fruits			
Apple	1960	27.2	57.3
Apricot	6.00	0.1	0.2
Cherry	429	6.0	12.5
Date	0.101	≤0.1	≤0.1
Fig	0.0647	≤0.1	≤0.1
Mango	4.86	≤0.1	0.1
Nectarine	3.63	≤0.1	0.1
Peach	644	9.0	18.8
Pear	229	3.2	6.7
Hot Pepper	48.2	0.7	1.4
Plum	36.6	0.5	1.1
Prune	61.4	0.9	1.8
Total	3423	47.6	
Berries & vine fruits			
Blackberry	94.5	1.3	10.6
Blueberry	154	2.1	17.3
Boysenberry	4.75	≤0.1	0.5
Cranberry	91.2	1.3	10.2
Currant	1.12	≤0.1	0.1
Gooseberry	0.348	≤0.1	≤0.1
Grape	411	5.7	46.1
Pimento	1.64	≤0.1	0.2
Rasberry	29.9	0.4	3.4
Strawberry	104	1.5	11.7
Total	892	12.4	
Field crops			
Asparagus	269	3.7	9.3
Cucumber	380	5.3	13.2
Eggplant	16.0	0.2	0.6
Okra	16.7	0.2	0.6
Rhubarb	6.80	0.1	0.2
Sweet pepper	155	2.2	5.4
Snap bean	1250	17.4	43.4
Squash	133	1.9	4.6
Tomato	655	9.1	22.7
Total	2880	40.0	

FIGURE E-4. BAES EXPOSED PRODUCE CATEGORY

Figure E-5 is Figure 2.1 from the Baes paper and provides B_v values that should be used for leafy vegetables. B_v whereas Exposed Produce, Protected Produce, and Grains use B_r.

	I A	II A											III A	IV A	V A	VI A	VII A
II	Li 0.025	Be 0.010											B 4.0		N 30		F 0.060
III	Na 0.075	Mg 1.0	III B	IV B	V B	VI B	VII B	———	VIII	———	I B	II B	Al 4.0×10^{-3}	Si 0.35	P 3.5	S 1.5	Cl 70
IV	K 1.0	Ca 3.5	Sc 6.0×10^{-3}	Ti 5.5×10^{-3}	V 5.5×10^{-3}	Cr 7.5×10^{-3}	Mn 0.25	Fe 4.0×10^{-3}	Co 0.020	Ni 0.060	Cu 0.40	Zn 1.5	Ga 4.0×10^{-3}	Ge 0.40	As 0.040	Se 0.025	Br 1.5
V	Rb 0.15	Sr 2.5	Y 0.015	Zr 2.0×10^{-3}	Nb 0.020	Mo 0.25	Tc 9.5	Ru 0.075	Rh 0.15	Pd 0.15	Ag 0.40	Cd 0.55	In 4.0×10^{-3}	Sn 0.030	Sb 0.20	Te 0.025	I 0.15
VI	Cs 0.080	Ba 0.15		Hf 3.5×10^{-3}	Ta 0.010	W 0.045	Re 1.5	Os 0.015	Ir 0.055	Pt 0.095	Au 0.40	Hg 0.90	Tl 4.0×10^{-3}	Pb 0.045	Bi 0.035	Po 2.5×10^{-3}	At 1.0
VII	Fr 0.030	Ra 0.015															

Lanthanides	La 0.010	Ce 0.010	Pr 0.010	Nd 0.010	Pm 0.010	Sm 0.010	Eu 0.010	Gd 0.010	Tb 0.010	Dy 0.010	Ho 0.010	Er 0.010	Tm 0.010	Yb 0.010	Lu 0.010
Actinides	Ac 3.5×10^{-3}	Th 8.5×10^{-4}	Pa 2.5×10^{-3}	U 8.5×10^{-3}	Np 0.10	Pu 4.5×10^{-4}	Am 5.5×10^{-3}	Cm 8.5×10^{-4}							

Key: Li 0.025 —— Symbol —— Transfer Coefficient, B_v

FIGURE E-5. BAES LEAFY VEGETABLE BVS

Figure E-6 is Figure 2.2 from the Baes paper and provides B_r values that should be used for protected produce, exposed produce, and grains.

	I A	II A											III A	IV A	V A	VI A	VII A
II	Li 4.0×10^{-3}	Be 1.5×10^{-3}											B 2.0		N 30		F 6.0×10^{-3}
III	Na 0.055	Mg 0.55	III B	IV B	V B	VI B	VII B	——	VIII	——	I B	II B	Al 6.5×10^{-4}	Si 0.070	P 3.5	S 1.5	Cl 70
IV	K 0.55	Ca 0.35	Sc 1.0×10^{-3}	Ti 3.0×10^{-3}	V 3.0×10^{-3}	Cr 4.5×10^{-3}	Mn 0.050	Fe 1.0×10^{-3}	Co 7.0×10^{-3}	Ni 0.060	Cu 0.25	Zn 0.90	Ga 4.0×10^{-4}	Ge 0.080	As 6.0×10^{-3}	Se 0.025	Br 1.5
V	Rb 0.070	Sr 0.25	Y 6.0×10^{-3}	Zr 5.0×10^{-4}	Nb 5.0×10^{-3}	Mo 0.060	Tc 1.5	Ru 0.020	Rh 0.040	Pd 0.040	Ag 0.10	Cd 0.15	In 4.0×10^{-4}	Sn 6.0×10^{-3}	Sb 0.030	Te 4.0×10^{-3}	I 0.050
VI	Cs 0.030	Ba 0.015		Hf 8.5×10^{-4}	Ta 2.5×10^{-3}	W 0.010	Re 0.35	Os 3.5×10^{-3}	Ir 0.015	Pt 0.025	Au 0.10	Hg 0.20	Tl 4.0×10^{-4}	Pb 9.0×10^{-3}	Bi 5.0×10^{-3}	Po 4.0×10^{-4}	At 0.15
VII	Fr 0.030	Ra 0.015															

Lanthanides	La 4.0×10^{-3}	Ce 4.0×10^{-3}	Pr 4.0×10^{-3}	Nd 4.0×10^{-3}	Pm 4.0×10^{-3}	Sm 4.0×10^{-3}	Eu 4.0×10^{-3}	Gd 4.0×10^{-3}	Tb 4.0×10^{-3}	Dy 4.0×10^{-3}	Ho 4.0×10^{-3}	Er 4.0×10^{-3}	Tm 4.0×10^{-3}	Yb 4.0×10^{-3}	Lu 4.0×10^{-3}
Actinides	Ac 3.5×10^{-4}	Th 8.5×10^{-5}	Pa 2.5×10^{-4}	U 4.0×10^{-3}	Np 0.010	Pu 4.5×10^{-5}	Am 2.5×10^{-4}	Cm 1.5×10^{-5}							

Key: Li 4.0×10^{-3} —— Symbol —— Transfer Coefficient, B_r

FIGURE E-6. BAES OTHER THAN LEAFY VEGETABLE BV'S

APPENDIX F. WATER, SOIL, AND FODDER INTAKE RATES BY ANIMALS

Table F-1 below lists the fodder, water, and soil intake rates of the farm animals that are offered in the PRG and DCC calculators.

TABLE F-1. ANIMAL FODDER, WATER, AND SOIL INTAKE RATES

	Fodder Intake (Qp) kg/day	Fodder Intake Source	Water Intake (Qw) L/day	Water Intake Source	Soil Intake (Qs) kg/day	Soil Intake Source
Dairy (Cow)	20.3	f	92	i	0.4	f
Beef	11.77	f	53	i	0.5	f
Swine	4.7	f	11.4	g,h	0.37	f
Poultry (Chicken)	0.2	f	0.4	a,f	0.022	f
Goat Milk	1.59	b,e	8.75	e	0.29	d
Sheep Milk	3.15	b,c	10.4	c	0.57	d
Sheep Meat	1.75	b,c	5.2	c	0.32	d
Goat Meat	1.27	b	3.81	e	0.23	d
Duck	0.24	a	0.48	a	0.024	a
Turkey	0.68	a	1.36	a	0.068	a
Goose	0.33	a	0.66	a	0.033	a

a. NRC 1994: (Qw = 2 x Qp) and (Qs = 10% of Qp)
b. Lyons et. al. 1999. Mutton Qp = 3.5% of body weight; Goat Qp = 4% of body weight; Dairy Sheep Qp = 1.5% x Mutton Qp; Dairy Goat Qp = 1.5% x Goat Qp.
c. OMAFRA Water Requirements of Livestock Factsheet (body weight for dairy sheep 90kg, body weight for feeder lamb 50kg)
d. Handbook of Ecotoxicology 2002: Qs = 18% of Qp for sheep. Due to lack of sufficient data for soil intake of goats, this figure was also used to determine Qs for goats.
e. Guidelines to Feeding and Management of Dairy Goats (Goat Qw = 3 x Qp; Dairy Goat Qw = average production milk x average consumption of water per 1 L of milk produced)
f. HHRAP 2005
g. NEC Swine Nutrition Guide
h. HHRAP 1998
i. Data Collection for the Hazardous Waste Identification Rule, U.S. EPA 1999